Connector for W-SIM™ Header Type

ALPS®

New 2007

SCZA2 Series

Contributing to improved set design flexibility through compact mounting area.

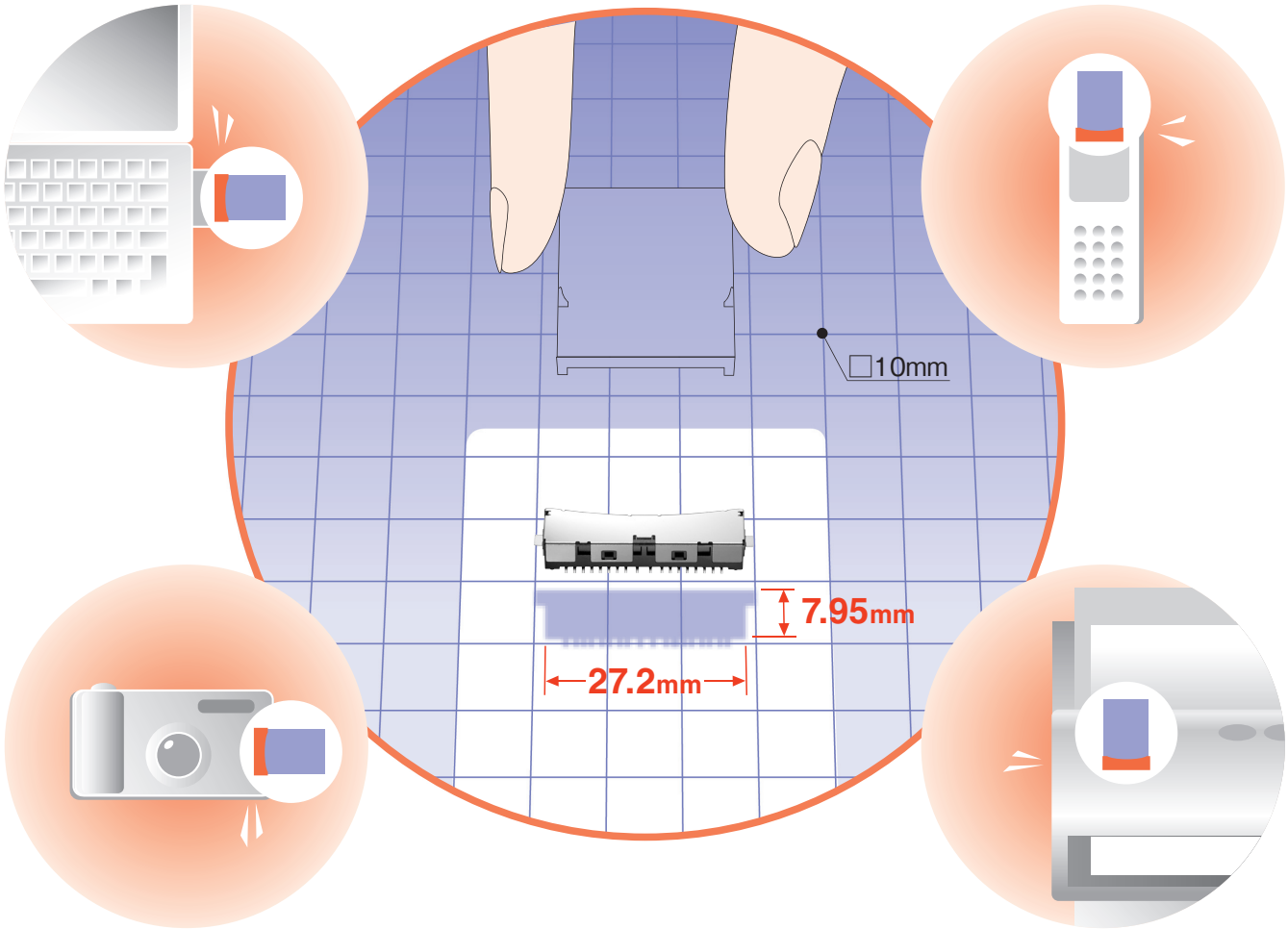

Compact and low-profile header type connector that contributes to the advancement of W-SIM™.

- Supports W-SIM™ equipped with wireless communications function.
- Compact and low-profile (Dimensions: 27.2mm×7.95mm×4.65mm)
- Realizes minimum mounting area and contributes to improved design flexibility.
- Double contact structure for both power and ground terminals prevents momentary power failure.

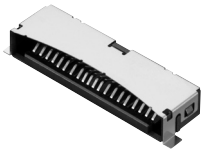

With boss, L type

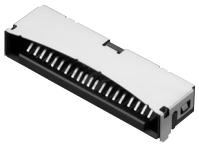

Without boss, 0.6mm type

Alps offers improved design flexibility for increasingly diversified set designs.

Connector for W-SIM™ Header Type

SCZA2 Series

With boss
L type

Without boss
0.6mm type

Contributing to improved set design flexibility through compact mounting area.

Applications

Mobile phones, personal digital assistants, notebook PCs, etc.

Products List

Product No.	Features
SCZA2A0100	With boss, L type
SCZA2A0200	Without boss, 0.6mm type

Typical Specifications

Structure	Specifications
Applicable media	W-SIM™
Dimensions (W x D x H)	27.2×7.95×4.65mm
Mounting type	Surface mounting type
Mounting style	Standard mount
Media ejection structure	Manual insertion/removal

Performance	Specifications
Operating temperature range	−20℃ to +60℃
Voltage proof	500V AC 1min
Insulation resistance (Initial)	1,000MΩ min.
Contact resistance (Initial)	100mΩ max.
Insertion and removal cycle	10,000cycles

Dimensions

SCZA2A0100
With boss, L type

Unit:mm

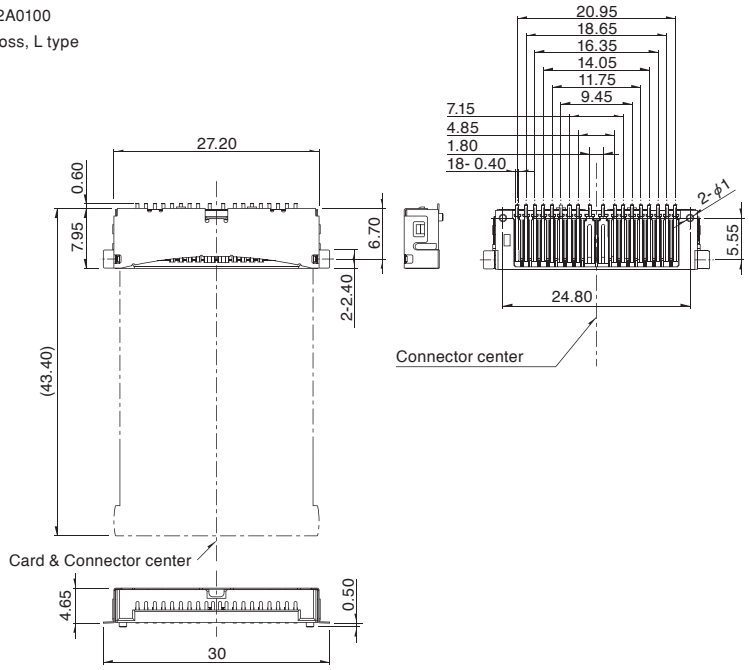

PC board mounting hole dimensions
(Viewed from the mounting side)

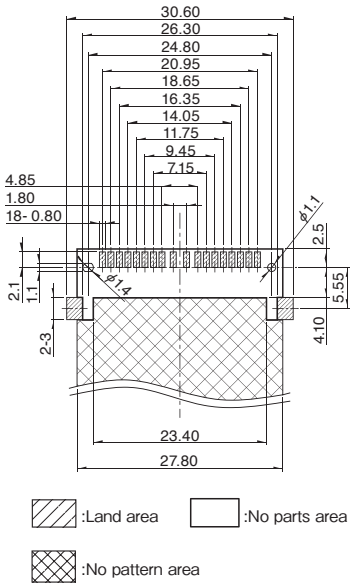

Cautions for Use

1. Specification indicated in this catalog is outline only. When employing the product, use of an officially authorized specification for supply contract is recommended.
2. Unless specifically indicated otherwise, products in this catalog have been designed and manufactured for use in ordinary electronic equipment and devices, such as AV equipment, electric home appliances, office machines, and communications equipment. Equipment manufacturers are consequently advised that when these products are planned for equipment that requires a high degree of safety and reliability, especially those apparatuses like medical equipment, aviation and aircraft equipment, space equipment, and burglar alarm equipment, the manufacturers should assure equipment safety by providing protection circuits and redundant circuitry and should fully study the suitability of such products for the intended equipment.
3. The external appearance, performances, and other properties of the product may be changed for improvement without prior notice. The product introduced in this catalog may discontinue being produced without prior notice.
4. W-SIM is a trademark of WILLCOM, INC.
5. All product names, company names and names of standards described in this catalog are trademarks or registered trademarks of their respective owners.
6. Please contact us for any enquiries and queries on our products and their uses.
7. This catalog is valid till the end of December 2007.

Inquiries about Products

Products Information Center +81 (3) 5499-8154
Products Catalog Site http://www3.alps.com

ALPS®
ALPS ELECTRIC CO., LTD.
1-7, Yukigaya-otsuka-cho, Ota-ku, Tokyo, 145-8501