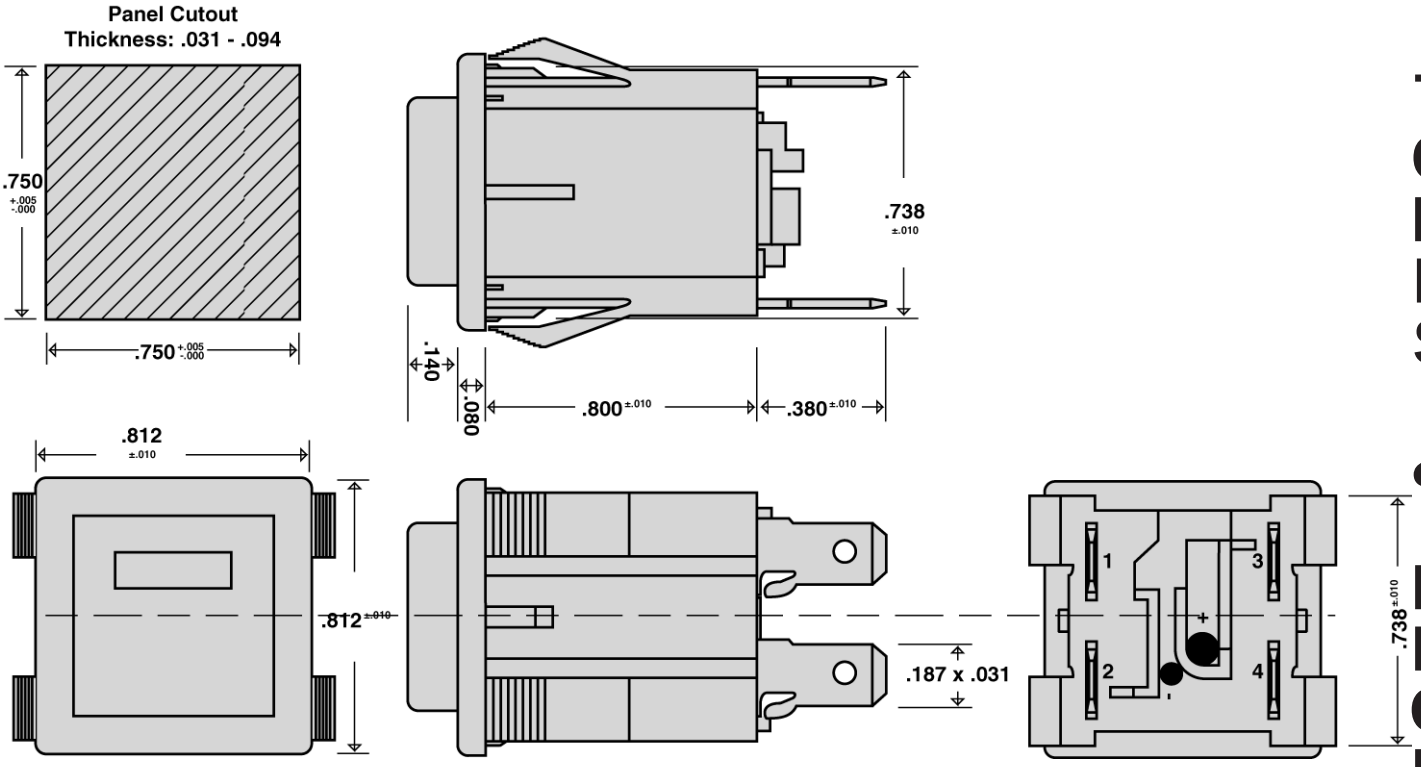

Lamp or LED Voltage*	Cap Style		Housing Color
	WITH WINDOW	TRANSPARENT (No Window)	
6V=6 Volt Incandescent	W1=Red	1=Red	Matte Finish
12V=12 Volt Incandescent	W2=Clear	2=Clear	M9=Black
28V=28 Volt Incandescent	W3=Amber	3=Amber	(Custom colors special order)
125V= 125 Volt Neon	W4=Green*	4=Green*	
250V=250 Volt Neon	W5=Blue*	5=Blue*	
6VR=6 Volt LED (RED)			
12VR=12 Volt LED (RED)		OPAQUE (No Window)	
6VG=6 Volt LED (GREEN)		7=White	
12VG=12 Volt LED (GREEN)		9=Black	
125VG=125 Volt Neon (GREEN)		11=Green	
250VG=250 Volt Neon (GREEN)		12=Red	