Fuse holder terminal blocks

for 6,35 x 25,4 mm *1/4 x 1 in.* and 6,35 x 32 mm *1/4 x 1 1/4 in.* fuses

Compression clamp

DIN 1 - DIN 3

ML 10/13.SF

Spacing 13 mm *(.512")*

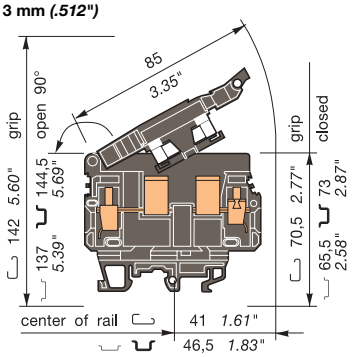

13 mm standard block.

Color	Type	Part numbers
Black V0	**ML 10/13.SF**	**0199 095.13**

Characteristics

Wire size		IEC NFC DIN	UL	CSA
Compression clamp	Solid wire	0,5-16 mm²	22-10 AWG	22-8 AWG
	Stranded wire	0,5-10 mm²	22-10 AWG	22-8 AWG

Voltage			
Rated	800 V (1)	600 V (1)	600 V (1)
Pulse	8 kV		
Pollution degree	3		

Current			
Rated	16 A	25 A	25 A

Wire size			
Rated / Gauge	10 mm² / A6	10 AWG	8 AWG

Wire stripping length	Recomm. screwdriver	Recomm. torque	Protection
12 mm *.472"*	5,5 mm *.217"*	1,2-1,4 Nm *10.6-12.3 lb.in*	

ML 10/13.SN

Spacing 13 mm *(.512")*

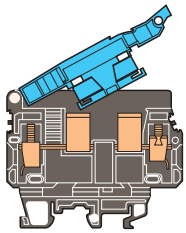

13 mm block with disconnect link bar locked on blue lever.

Color	Type	Part numbers
Black / Blue V0	**ML 10/13.SN**	**0199 105.22**

Characteristics

Wire size		IEC NFC DIN	UL	CSA
Compression clamp	Solid wire	0,5-16 mm²	22-10 AWG	22-8 AWG
	Stranded wire	0,5-10 mm²	22-10 AWG	22-8 AWG

Voltage			
Rated	800 V	600 V	600 V
Pulse	8 kV		
Pollution degree	3		

Current			
Rated	16 A	25 A	25 A

Wire size			
Rated / Gauge	10 mm² / A6	10 AWG	8 AWG

Wire stripping length	Recomm. screwdriver	Recomm. torque	Protection
12 mm *.472"*	5,5 mm *.217"*	1,2-1,4 Nm *10.6-12.3 lb.in*	

End stop	th. 9,1 mm	**BADL** V0	**0199 408.02**
End stop	th. 9,1 mm	**BAM**	**0103 002.26**
Other end stops : See Accessories section			
Rail	35 x 7,5 x 1	**PR30** prepunched	**0173 220.05**
Rail	35 x 15 x 2,3	**PR4**	**0168 500.12**
Rail	35 x 15 x 1,5	**PR5** prepunched	**0101 598.26**
Rail	32 x 15	**PR1Z2**	**0163 050.04**
Other rails : See Accessories section			

Notes

The use of some accessories may decrease the block's voltage rating. For more information, consult us.

Accessories

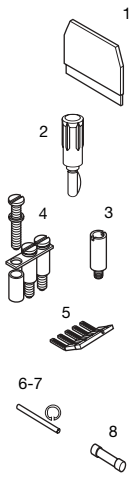

		Type		Part numbers
1	End section black	**FEM13U** V0	th. 1,5 mm	**0199 635.24**
2	Test plug	**FC2**	DIA. 2 mm	**0007 865.26**
		FC4	DIA. 4 mm	**0167 860.01**
3	Test socket	**AL2**	DIA. 2 mm	**0163 043.21**
		AL3	DIA. 3 mm	**0163 261.00**
		AL4	DIA. 4 mm	**0163 262.01**
4	Standard jumper bar	**BJS131** (2)	10 poles	**0175 991.11**
	screw for **BJS**	**VJS11**		**0163 394.26**
	washer for **BJS**	**RDJ11**		**0168 783.01**
5	Comb-type jumper bar 70 A	**PC13**	10 poles	**0173 510.20**
6	Assembly rod	**TGA13**	2 poles	**0168 564.05**
		TGA13	3 poles	**0168 565.06**
		TGA13	4 poles	**0168 566.07**
7	Assembly ring	**ANT**		**0168 675.14**
8	Fuse 6,35x32 mm (1/4 x 1 1/4")	**FU633**	6,35 x 32	
	BPC quick-blow fuse cartridge		0,25 A	**0168 554.03**
	as per IEC 127-2		0,63 A	**0168 555.04**
			1 A	**0168 556.05**
			1,6 A	**0168 557.06**
			2,5 A	**0168 558.17**
			4 A	**0168 559.10**
			6,3 A	**0168 560.15**
	HPC time delay fuse cartridge		10 A	**0168 561.02**
	as per UL 198G		16 A	**0168 562.03**

R See section on markers marking method

(6) RC610 on top of block (17) RC810 on sides of bock (26)

		Type		Part numbers
1	End section black	**FEM13U** V0	th. 1,5 mm	**0199 635.24**
2	Test plug	**FC2**	DIA. 2 mm	**0007 865.26**
		FC4	DIA. 4 mm	**0167 860.01**
3	Test socket	**AL2**	DIA. 2 mm	**0163 043.21**
		AL3	DIA. 3 mm	**0163 261.00**
		AL4	DIA. 4 mm	**0163 262.01**
4	Standard jumper bar	**BJS131** (2)	10 poles	**0175 991.11**
	screw for **BJS**	**VJS11**		**0163 394.26**
	washer for **BJS**	**RDJ11**		**0168 783.01**
5	Comb-type jumper bar 70 A	**PC13**	10 poles	**0173 510.20**
6	Assembly rod	**TGA13**	2 poles	**0168 564.05**
		TGA13	3 poles	**0168 565.06**
		TGA13	4 poles	**0168 566.07**
7	Assembly ring	**ANT**		**0168 675.14**

Installation of jumper bar not assembled

Use of the BJS requires the user to cut out the partition

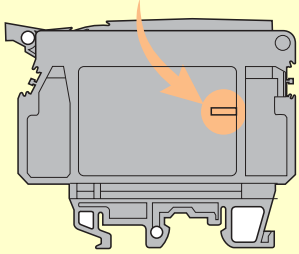

(6) RC610 on top of block (17) RC810 on sides of block (26)

Note : (1) Insulation voltage of terminal block - operating voltage : In accordance with fuse rating.
(2) Use of these accessories require the user to cut out the partition.