NAiS

DIN48 SIZE
MULTI-RANGE ANALOG TIMER

PM4H-A
PM4H-S
PM4H-M

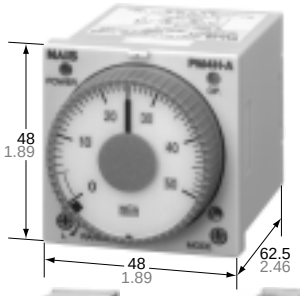


Socket mount


Flush mount

FEATURES

- **Front panel of IP65 type is protected against water-splash and dust**
- **100-240V AC free-voltage input**
- **Built-in Screw terminals**
- **Screw terminal type is used for easy wiring and reducing additional cost for accessories.**
- **8 different operation modes: (PM4H-A)**
- **Tube base with pin style terminals**
- **Multiple time ranges — 1 s to 500 h (Max.)**
- **Short body — 62.5mm 2.46 inch (screw terminal type)**

PRODUCT TYPE

Type	Operation mode	Contact arrangement	Time range	Protective construction	Rated operating voltage	Terminal type	Part No.
PM4H-A	8 operation modes • Pulse ON-delay • Pulse Flicker • Pulse ON-flicker • Differential ON/OFF-delay (1) (2) • Signal OFF-delay • Pulse One-shot • Pulse One-cycle	Relay Timed-out 2 Form C	16 selectable ranges 1s to 500h	IP65	100 to 240V AC	11 pin	PM4HA-H-AC240VW
						Screw terminal	PM4HA-H-AC240VSW
					24V AC/DC	11 pin	PM4HA-H-24VW
						Screw terminal	PM4HA-H-24VSW
					12V DC	11 pin	PM4HA-H-DC12VW
						Screw terminal	PM4HA-H-DC12VSW
				IP50	100 to 240V AC	11 pin	PM4HA-H-AC240V
						Screw terminal	PM4HA-H-AC240VS
					24V AC/DC	11 pin	PM4HA-H-24V
						Screw terminal	PM4HA-H-24VS
					12V DC	11 pin	PM4HA-H-DC12V
						Screw terminal	PM4HA-H-DC12VS
PM4H-S	Power ON-delay	Relay Timed-out 2 Form C		IP65	100 to 240V AC	8 pin	PM4HS-H-AC240VW
						Screw terminal	PM4HS-H-AC240VSW
					24V AC/DC	8 pin	PM4HS-H-24VW
						Screw terminal	PM4HS-H-24VSW
					12V DC	8 pin	PM4HS-H-DC12VW
						Screw terminal	PM4HS-H-DC12VSW
				IP50	100 to 240V AC	8 pin	PM4HS-H-AC240V
						Screw terminal	PM4HS-H-AC240VS
					24V AC/DC	8 pin	PM4HS-H-24V
						Screw terminal	PM4HS-H-24VS
					12V DC	8 pin	PM4HS-H-DC12V
						Screw terminal	PM4HS-H-DC12VS
PM4H-M	5 operation modes (With instantaneous contact) • Power ON-delay • Power Flicker • Power ON-flicker • Power One-shot • Power One-cycle	Relay Timed-out 1 Form C Instantaneous 1 Form C		IP65	100 to 240V AC	8 pin	PM4HM-H-AC240VW
						Screw terminal	PM4HM-H-AC240VSW
					24V AC/DC	8 pin	PM4HM-H-24VW
						Screw terminal	PM4HM-H-24VSW
					12V DC	8 pin	PM4HM-H-DC12VW
						Screw terminal	PM4HM-H-DC12VSW
				IP50	100 to 240V AC	8 pin	PM4HM-H-AC240V
						Screw terminal	PM4HM-H-AC240VS
					24V AC/DC	8 pin	PM4HM-H-24V
						Screw terminal	PM4HM-H-24VS
					12V DC	8 pin	PM4HM-H-DC12V
						Screw terminal	PM4HM-H-DC12VS

If you use this timer under harsh environment, please order above sealed type (IP65 type). IP65 type — Protection dust and water jet splay on the front face.

TIME RANGE

Scale \ Time unit		sec	min	hrs	10h
1	Control time range	0.1s to 1s	0.1 min to 1 min	0.1h to 1h	1.0h to 10h
5		0.5s to 5s	0.5 min to 5 min	0.5h to 5h	5h to 50h
10		1.0s to 10s	1.0 min to 10 min	1.0h to 10h	10h to 100h
50		5s to 50s	5 min to 50 min	5h to 50h	50h to 500h

Note: 0 setting is for instantaneous output operation.

PM4H-A/PM4H-S/PM4H-M
All types of PM4H timer have multi-time range.
16 time ranges are selectable.
1s to 500h (Max. range) is controlled.

CHARACTERISTICS

Item			PM4H-A	PM4H-S	PM4H-M
Rating	Rated operating voltage		100 to 240V AC, 12V DC, 24V AC/DC		
	Rated frequency		50/60Hz common (AC operating type)		
	Rated power consumption		Max. 10VA (100 to 240V AC) Max. 2.5VA (24V AC) Max. 2W (12V DC, 24V DC)		
	Output rating		5A 250V AC (resistive load)		
	Operating mode		Pulse ON-delay Pulse Flicker Pulse ON-Flicker Differential ON/OFF-delay (1) (2) Signal OFF-delay Pulse One-shot Pulse One-cycle	Power ON-delay	Power ON-delay Power Flicker Power ON-flicker Power One-shot Power One-cycle (with instantaneous contact)
	Time range		1s to 500h (Max.) 16 time ranges switchable		
Time accuracy Note:)	Operating time fluctuation		±0.3% (power off time change at the range of 0.1s to 1h)		
	Setting error		±5%		
	Voltage error		±0.5% (at the operating voltage changes between 85 to 110%)		
	Temperature error		±2% (at 20°C ambient temp. at the range of –10 to +50°C +14 to +122°F)		
Contact	Contact arrangement		Timed-out 2 Form C		Timed-out 1 Form C Instantaneous 1 Form C
	Contact resistance (Initial value)		Max. 100mΩ (at 1A 6V DC)		
	Contact material		Silver alloy		Au flash on Silver alloy
Life	Mechanical (contact)		2×10^7		
	Electrical (contact)		10^5 (at rated control capacity)		
Electrical function	Allowable operating voltage range		85 to 110% of rated operating voltage (at 20°C coil temp.)		
	Insulation resistance (Initial value)		Min. 100MΩ Between live and dead metal parts Between input and output Between contacts of different poles Between contacts of same pole		
	Breakdown voltage (Initial value)		2,000Vrms for 1 min Between live and dead metal parts 2,000Vrms for 1 min Between input and output 2,000Vrms for 1 min Between contacts of different poles 1,000Vrms for 1 min Between contacts of same pole		
	Min. power off time		100ms		
	Max. temperature rise		55°C 131°F		
Mechanical function	Shock resistance	Functional	Min. 98m/s² (4 times on 3 axes)		
		Destructive	Min. 980m/s² (5 times on 3 axes)		
	Vibration resistance	Functional	10 to 55Hz: 1 cycle/min double amplitude of 0.5mm (10min on 3 axes)		
		Destructive	10 to 55Hz: 1 cycle/min double amplitude of 0.75mm (1h on 3 axes)		
Operating condition	Ambient temperature		–10 to +50°C +14 to +122°F		
	Ambient humidity		Max. 85%RH		
	Atmospheric pressure		860 to 1,060hPa		
	Ripple factor (DC type)		20%		
Others	Protective construction		IP65 on front panel (using rubber gasket ATC18002) <only for IP65 type>		
	Weight		100g 3.527 oz (Pin type)		
			110g 3.880 oz (Screw terminal type)		

Note: 1) Unless otherwise specified, the measurement conditions at the maximum scale time standard are specified to be the rated operating voltage (within 5% ripple factor for DC), 20°C 68°F ambient temperature, and 1s power off time.
2) For the 1s range, the tolerance for each specification becomes ±10ms.

WIRING DIAGRAMS

PM4H-A

Pin type
- Timed-out 2 Form C

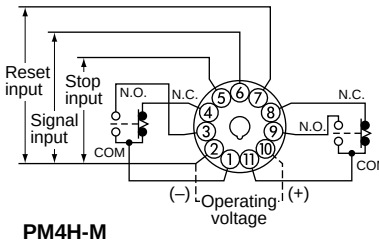

Screw terminal type
- Timed-out contact 2 Form C

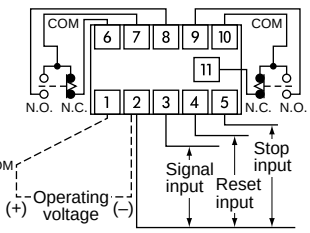

PM4H-M

Pin type
- Timed-out 1 Form C
- Instantaneous 1 Form C

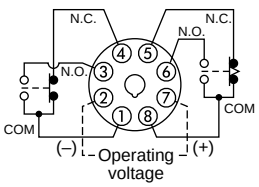

Screw terminal type
- Timed-out 1 Form C
- Instantaneous 1 Form C

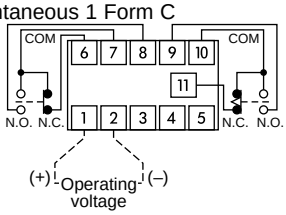

PM4H-S

Pin type
- Timed-out 2 Form C

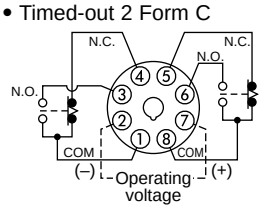

Screw terminal type
- Timed-out 2 Form C

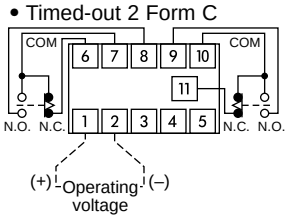

1) DC Type

Type	Pin	Screw terminal
PM4H-A	Connect the terminal ② to negative (–), and the terminal ⑩ to positive (+).	Connect the terminal 2 to negative (–), and the terminal 1 to positive (+).
PM4H-S PM4H-M	Connect the terminal ② to negative (–), and the terminal ⑦ to positive (+).	

2) Contact



PARTS NAME

PM4H-S



PM4H-A

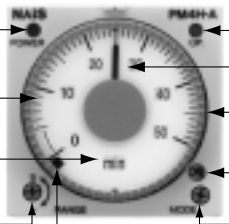

16 time settings selectable
1 s to 500 h
1s 5s 10s 50s
1min 5min 10min 50min
1h 5h 10h 50h
10h 50h 100h 500h

Instantaneous output area
When the hand is in this area, instantaneous operation starts.

Selectable from 8 operation modes
ON : Pulse ON-delay
FL : Pulse Flicker
FO : Pulse ON-flicker
OF1 : Differential ON/OFF-delay (1)
SF : Signal OFF-delay
OS : Pulse One-shot
OF2 : Differential ON/OFF-delay (2)
OC : Pulse One-cycle

PM4H-M



Operation mode selector
Selectable from 5 operation modes
ON : Pulse ON-delay
FL : Pulse flicker
FO : Pulse ON-flicker
OS : Pulse One-shot
OC : Pulse One-cycle

DIMENSIONS

mm inch

• PM4H-□

Screw terminal type
(Flush mount)

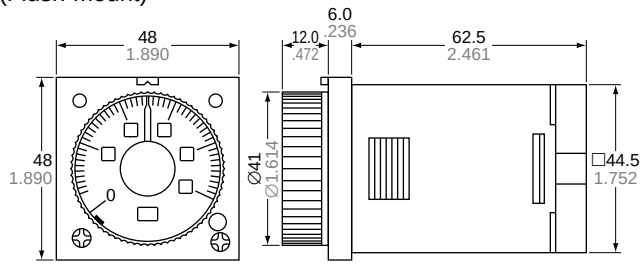

Pin type
(Flush mount/Surface mount)

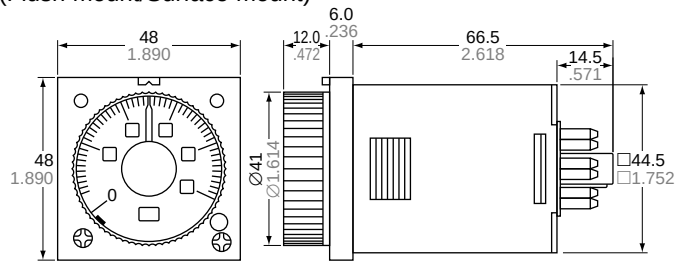

• Panel mount dimensions (with mounting frame)

Screw terminal type

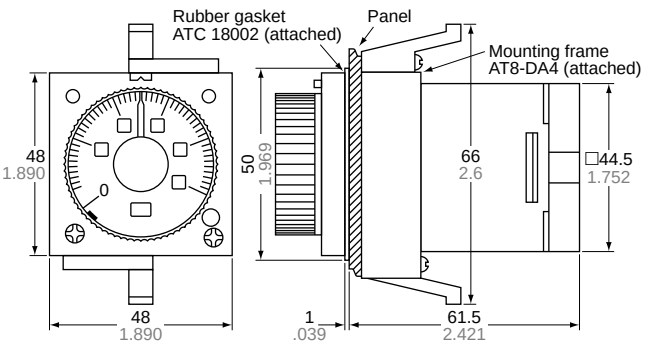

Pin type

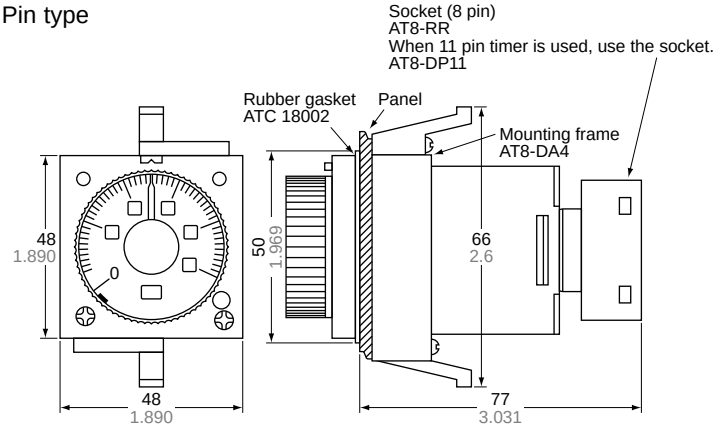

• Surface mount dimensions

Socket mount (Pin type)

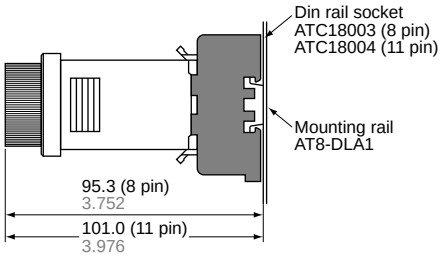

• Panel cut out dimensions

Standard cut out dimensions are shown below.
Use mounting frame and rubber gasket (ATC18002).

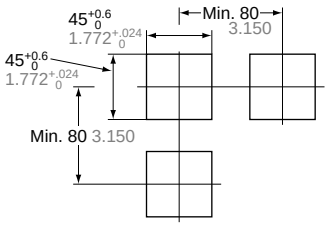

• Adjacent mounting

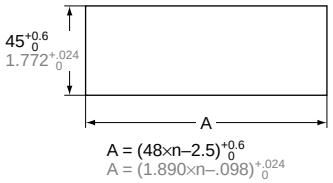

$A = (48 \times n - 2.5)^{+0.6}_{0}$
$A = (1.890 \times n - .098)^{+.024}_{0}$

Note) 1. The proper thickness of mounting panel is between 1 to 5mm.
2. Adjacent mount is less water-resistant.

OPERATION MODE

PM4H-A

(✷ LED lighting ✲ LED flickering
T: Setting time t_1, t_2, t_a, t_b<T t_1+t_2=T)

Operation mode	Operation	Time chart
Pulse ON-delay (ON)	Turn the operation selector to (ON). Power is applied continuously. When a start signal is applied, the time cycle begins. The output contacts change state after the time delay is completed. The contacts will return to their normal state when a reset signal is applied or power is removed. (Note: When a stop signal is applied during timing operation, the time cycle stops. When a stop signal is removed, the time cycle resumes where it left off.)	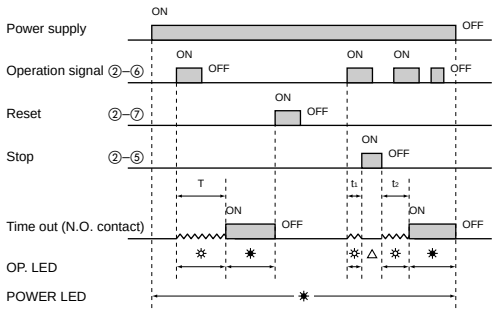 △Note: ✷ LED lighting or No LED lighting
Pulse OFF-Flicker (FL)	Turn the operation selector to (FL). Power is applied continuously. When a start signal is applied, the time cycle begins but the output contacts remain in their normal state. When the time delay is completed, the output contacts change state and next time cycle begins. When this time delay is completed, the output contacts return to their normal state. This cycle will repeat until a reset signal is applied or power is removed. (Note: When a stop signal is applied during timing operation, the time cycle stops. When a stop signal is removed, the time cycle resumes where it left off.)	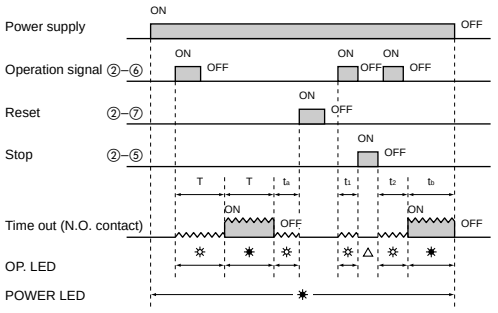 △Note: ✷ LED lighting or No LED lighting
Pulse ON-flicker (FO)	Turn the operation selector to (FO). Power is applied continuously. When a start signal is applied, the output contacts change state immediately and time cycle begins. When the time delay is completed, the output contacts change state and next time cycle begins. When the time delay is completed, the output contacts return to the normal state. This cycle will repeat until a reset signal is applied or power is removed. (Note: When a stop signal is applied during timing operation, the time cycle stops. When a stop signal is removed, the time cycle resumes where it left off.)	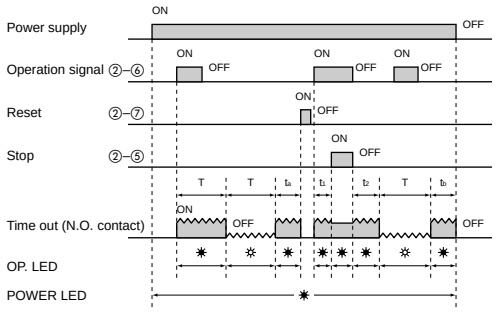
Differential ON/OFF-delay (1) (OF1)	Turn the operation selector to (OF1). Power is applied continuously. When a start signal is applied, the output contacts change state immediately and time cycle begins. The output contacts change state after the timing cycle is completed. When the start signal is removed, the output contacts change state and time cycle starts again. If operation signal is turned ON or OFF during timing operation, the time cycle will restart. The output contacts will return to their normal state when a reset signal is applied or power is removed. (Note: When a stop signals is applied during timing operation, the time cycle stops. When a stop signal is removed, the time cycle resumes where it left off.)	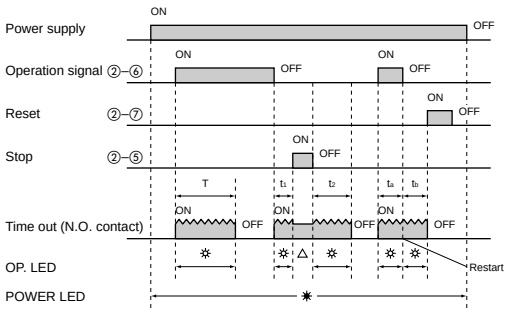 △Note: ✷ LED lighting or No LED lighting
Signal OFF-delay (SF)	Turn the operation selector to (SF). Power is applied continuously. When a start signal is applied, the output contacts change state immediately. When the start signal is removed the time cycle begins. The output contacts will return to their normal state when the time delay is completed. Reset will occur when a reset signal is applied or power is removed. (Note: When a stop signal is applied during timing operation, the time cycle stops. When a stop signal is removed, the time cycle resumes where it left off.)	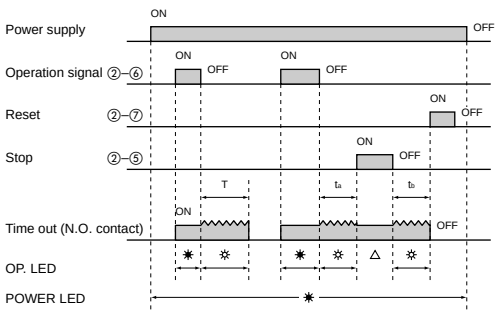 △Note: ✷ LED lighting or No LED lighting

Note: Keep 0.1s or more for power off time.
Keep 0.05s or more for signal, stop, reset input time.

Operation mode	Operation	Time chart
Pulse One-shot (0S)	Turn the operation selector to (0S). Power is applied continuously. When a start signal is applied, the output contacts change state immediately and time cycle begins. When the time delay is completed, the output contacts return to their normal state. The contacts will return to normal state when a reset signal is applied or power is removed. (Note: When a stop signal is applied during timing operation, the time cycle stops. When a stop signal is removed, the time cycle resumes where it left off.)	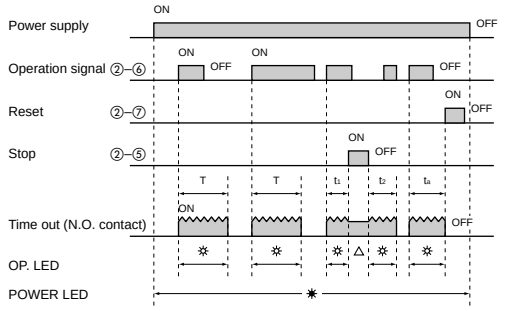 △Note: ✷ LED lighting or No LED lighting
Differential ON/OFF-delay (2) (0F2)	Turn the operation selector to (0F2). Power is applied continuously. When a start signal is applied, the ON-delay time cycle begins and the output contacts remain in their normal state. The output contacts change state after time delay is completed. When the start signal is removed the OFF-delay time cycle begins. The output contacts return to their normal state after the time delay is completed. If the start signal is applied or removed during the timing operation, the output contacts will change state and the time cycle starts over. The contacts will return to their normal state when a reset signal is applied or power is removed. (Note: When a stop signal is applied during timing operation, the time cycle stops. When a stop signal is removed, the time cycle resumes where it left off.)	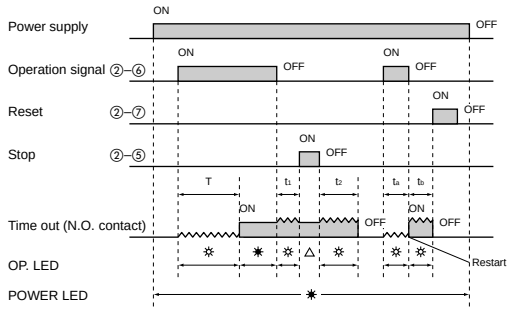 △Note: ✷ LED lighting or No LED lighting
Pulse One-cycle (0C)	Turn the operation selector to (0C). Power is applied continuously. When a start signal is applied, the time cycle begins but the output contacts remain in their normal state. The output contacts change state for 0.8s after time delay is completed. Reset will occur when a reset signal is applied or power is removed. (Note: When a stop signal is applied during timing operation, the time cycle stops. When a stop signal is removed, the time cycle resumes where it left off.)	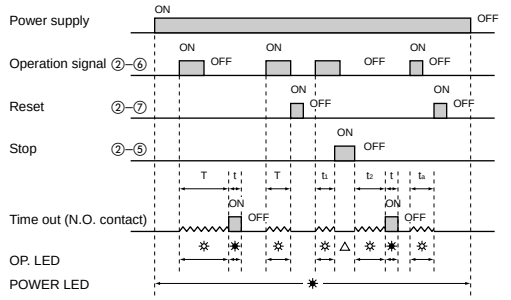 One pulse time (t): Approx. 0.8s △Note: ✷ LED lighting or No LED lighting

Note: Keep 0.1s or more for power off time.
Keep 0.05s or more for signal, stop, reset input time.

PM4H-S

(✷ LED lighting ✲ LED flickering
T: Setting time)

Operation mode	Operation	Time chart
Power ON-delay	When power is applied continuously, the time cycle begins. The output contacts change state after the time delay is completed.	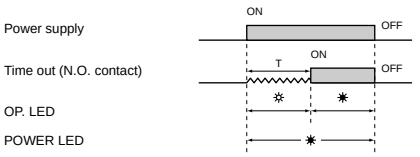

PM4H-M

Operation mode	Operation	Time chart
Power ON-delay (ON) **Power Flicker** (FL) **Power ON-flicker** (FO) **Power One-shot** (0S) **Power One-cycle** (0C)	Power ON-delay When power is applied continuously, the instantaneous output contact changes state and the timing cycle begins. The timed contact changes state after the time delay is completed. Reset will occur when power is removed. PM4H-M timers do not have external signal, reset and stop inputs. (For other operation modes, refer to the operation mode of PM4H-A.)	Power ON-delay 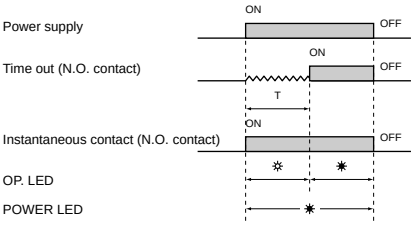

Note: Keep 0.1s or more for power off time. PM4H-M timers do not have each input which is signal, reset and stop.