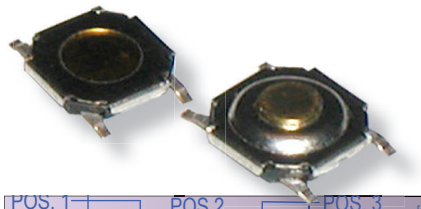

CS1204

Surface Mount Tactile

Specifications

Electrical Ratings	50mA @ 50VDC
Electrical Life	100,000 cycles typical
Contact Resistance	<50mΩ initial
Actuation Force	160 ± 50gF 260 ± 50gF
Acutation Travel	.25 ± .1mm

Dielectric Strength	250Vrms min
Insulation Resistance	>100MΩ min
Operating Temperature	-40ºC to 85ºC
Storage Temperature	-40ºC to 85ºC

Materials

Actuator	Brass
Housing	PA6T Nylon
Cover	Stainless Steel
Contacts	Stainless Steel, Silver Plated
Terminals	Phosphor Bronze, Silver Plated

Ordering Information

1. Series	CS1204	F160
CS1204 CS1204A		
2. Actuation Force F160 = 160gF F260 = 260gF		

Dimensions

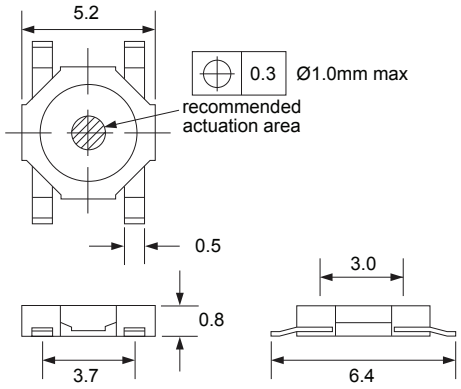

CS1204

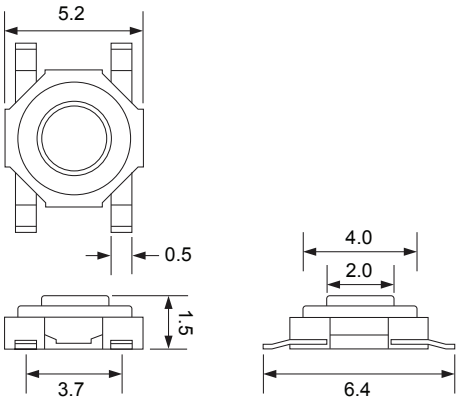

CS1204A

Schematic & PC Layout

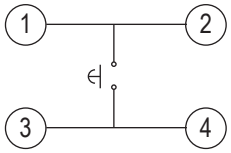

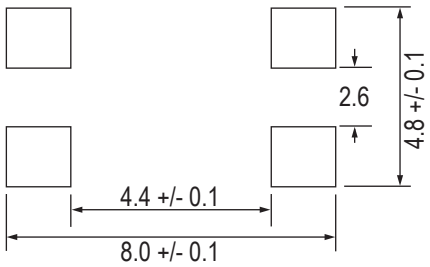

20550 Commerce Blvd, Rogers, MN 55374 USA
Sales (763) 535-2339
Dimensions are shown for reference purposes only.
CS1204 Rev B 11/2022

www.CITRelay.com
email: sales@CITRelay.com
Specifications and availability subject to change without notice.