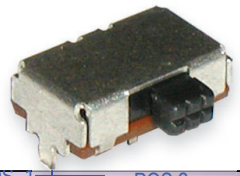

MS2211

Horizontal Pushbutton

Specifications

Electrical Ratings	200mA @ 30VDC
Electrical Life	10,000 cycles typical
Contact Resistance	<50mΩ initial
Dielectric Strength	1000Vrms min
Insulation Resistance	>100MΩ min

Actuation Force	250 ± 100gF
Actuation Travel	2.0mm total
Operating Temperature	-40ºC to 85ºC
Storage Temperature	-40ºC to 85ºC

Materials

Actuator	6/6 Nylon
Housing	Steel
Base	Phenolic
Contacts	Phosphor Bronze, Silver Plated
Terminals	Brass, Silver Plated

Ordering Information

1. Series	MS2211	L4
MS2211		
2. Actuator Length L2 = 2mm L4 = 4mm		

Dimensions

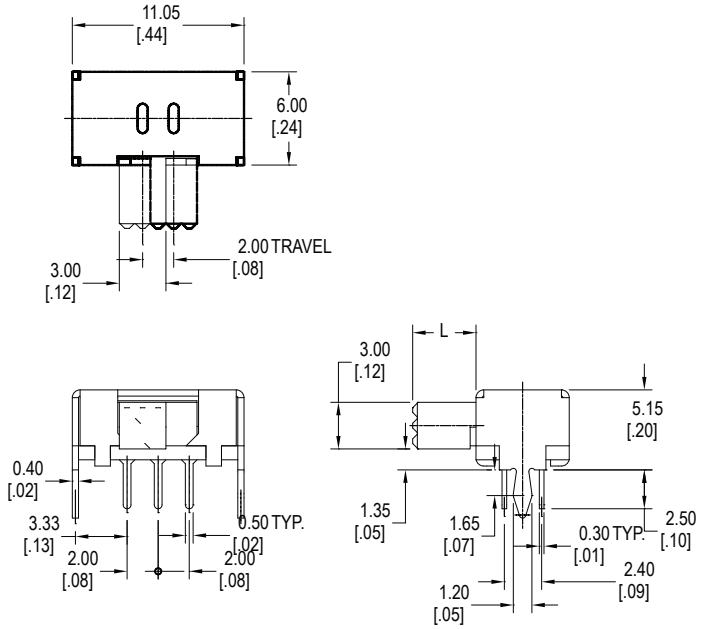

Schematic & PC Layout

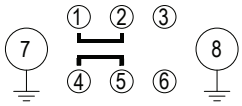

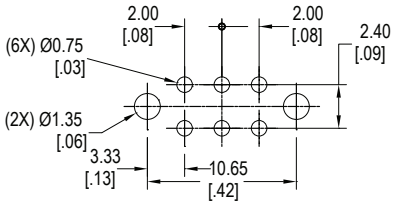

20550 Commerce Blvd, Rogers, MN 55374 USA
Sales (763) 535-2339
Dimensions are shown for reference purposes only.
MS2211 Rev B 11/2022

www.CITRelay.com
email: sales@CITRelay.com
Specifications and availability subject to change without notice.