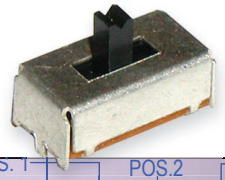

MS2305

Horizontal Pushbutton

Specifications

Electrical Ratings	200mA @ 30VDC
Electrical Life	10,000 cycles typical
Contact Resistance	<50mΩ initial
Dielectric Strength	1000Vrms min
Insulation Resistance	>100MΩ min

Actuation Force	250 ± 100gF
Actuation Travel	2.0mm per position; 4.0mm total
Operating Temperature	-40ºC to 85ºC
Storage Temperature	-40ºC to 85ºC

Materials

Actuator	6/6 Nylon
Housing	Steel
Base	Phenolic
Contacts	Phosphor Bronze, Silver Plated
Terminals	Brass, Silver Plated

Ordering Information

1. Series	MS2305	L2
MS2305		
2. Actuator Length L2 = 2mm L4 = 4mm		

Dimensions

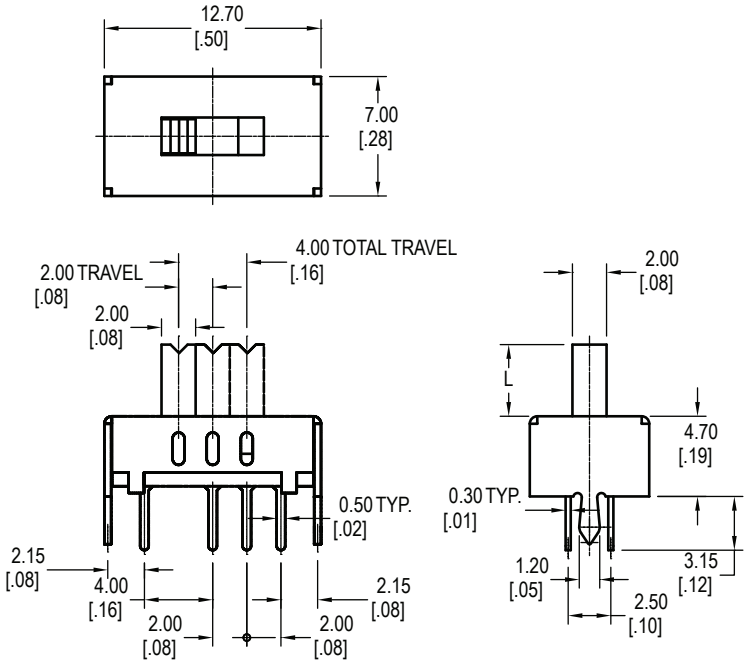
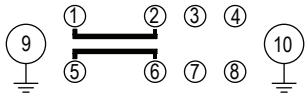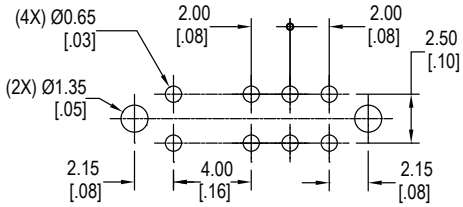
Schematic & PC Layout