SHEET OF

TOP VIEW -SHOW ORIENTATION OF LEGENDS
IN RESPECT TO THE PCB PIN TERMINALS.

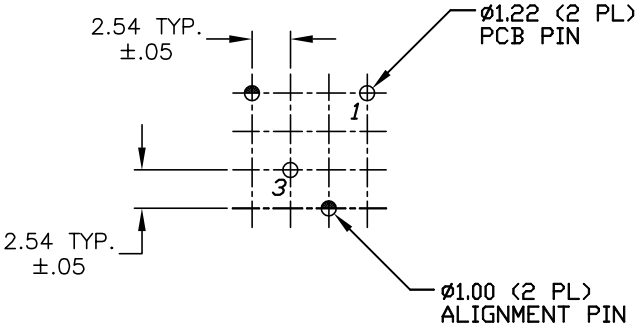

RECOMMENDED P.C.B. LAYOUT

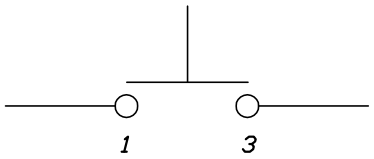

CIRCUIT: SPST
CONTACT CONFIGURATION

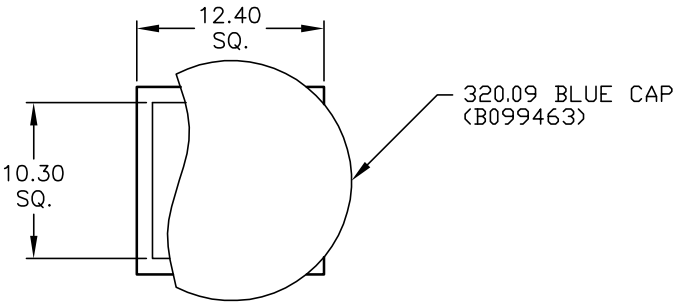

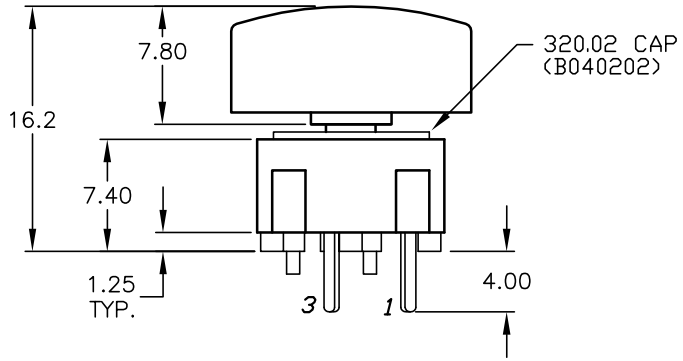

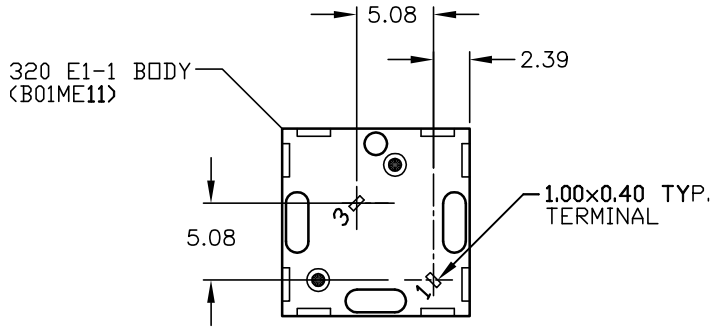

NOTES:
1. ALL DIMINSIONS IN MM
2. GENERAL TOLERANCE: X.X=±0.4
   X.XX=±0.25
3. RATING: 25mA, @50VDC
4. OPERATING FORCE: 120gF

REV.	ECN No.	DESCRIPTION	DATE	CHKD
A	11232	RELEASED FOR PRODUCTION	1/12/01	CJB

THE INFORMATION CONTAINED IN THIS DOCUMENT
IS PROPRIETARY TO E-SWITCH AND IS
NOT TO BE COPIED OR TRANSFERRED

E-SWITCH®

TITLE: 320.09 E1-1 BLU

SCALE	DATE	DR	DWG	REV
2:1	1/12/01	CJB	XB0809A	A