SHEET OF

TOP VIEW -SHOW ORIENTATION OF LEGENDS
IN RESPECT TO THE PCB PIN TERMINALS.

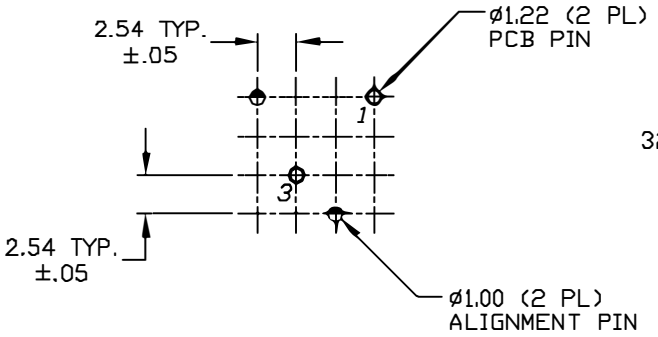

RECOMMENDED P.C.B. LAYOUT

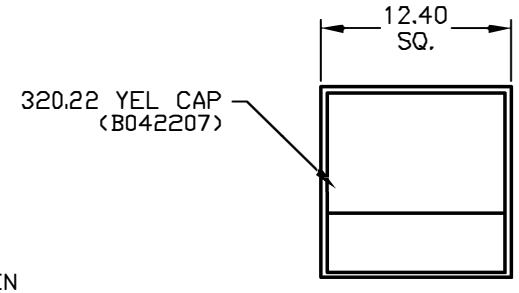

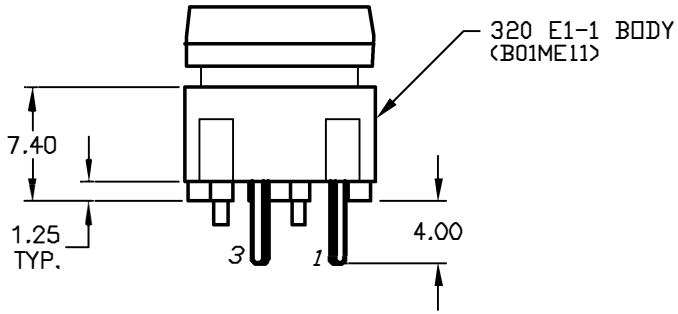

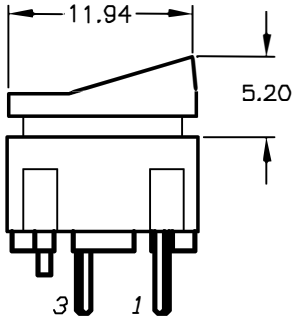

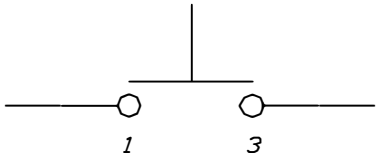

CIRCUIT: SPST
CONTACT CONFIGURATION

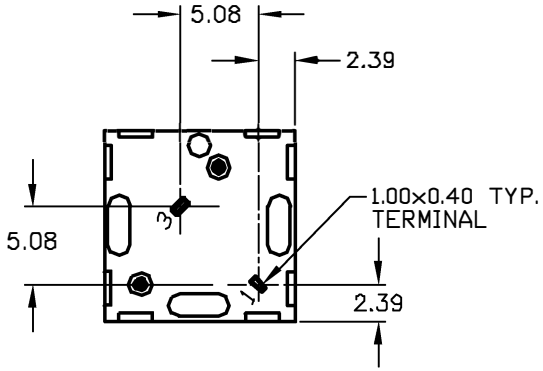

NOTES:
1. ALL DIMINSIONS IN MM
2. GENERAL TOLERANCE: X.X=±0.4
   X.XX=±0.25
3. TERMINAL NO'S FOR REFERENCE ONLY.
4. RATING: 25mA, @50VDC
5. OPERATING FORCE: 120gF
6. TRAVEL TO MAKE: 0.7mm

REV.	ECN No.	DESCRIPTION	DATE	CHKD
A	11928	RELEASED FOR PRODUCTION	1/09/02	CJB

THE INFORMATION CONTAINED IN THIS DOCUMENT
IS PROPRIETARY TO E-SWITCH AND IS
NOT TO BE COPIED OR TRANSFERRED

E-SWITCH®

TITLE: 320.22 E1-1 YEL

SCALE	DATE	DR	DWG	REV
2:1	1/09/02	CJB	XB0021P	A