SHEET OF

TOP VIEW -SHOW ORIENTATION OF LEGENDS
IN RESPECT TO THE PCB PIN TERMINALS.

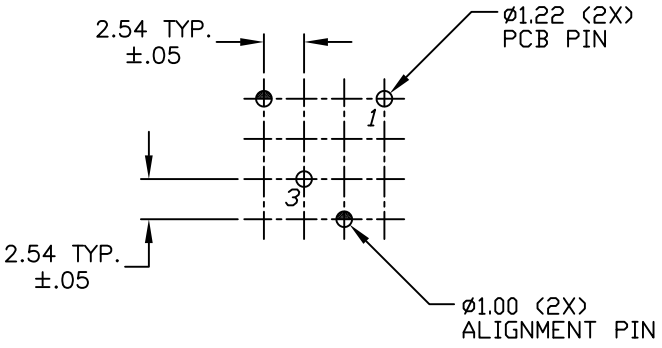

RECOMMENDED P.C.B. LAYOUT

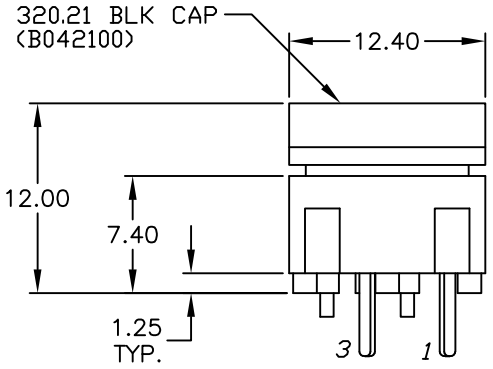

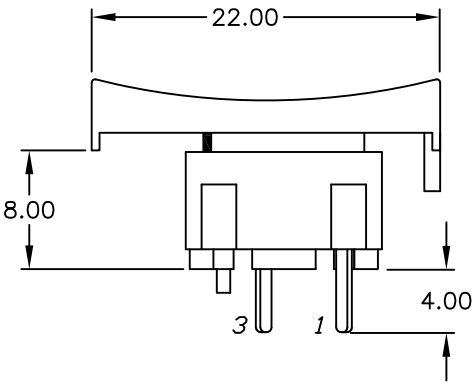

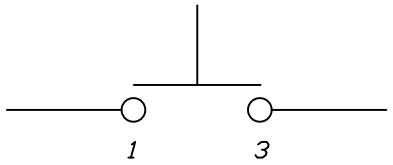

CIRCUIT: SPST
CONTACT CONFIGURATION

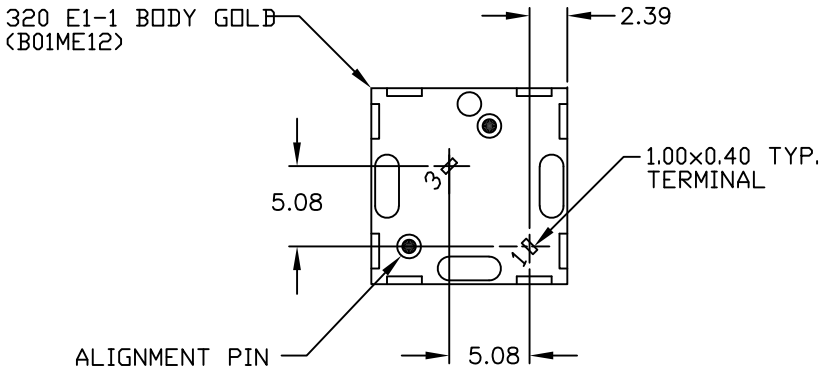

NOTES:
1. ALL DIMINSIONS IN MM
2. GENERAL TOLERANCE: X.X=±0.4
   X.XX=±0.25
3. RATING: 50mA, @50VDC
4. OPERATING FORCE: 120gF
5. TRAVEL TO MAKE: 0.7mm

REV.	ECN No.	DESCRIPTION	DATE	CHKD
A	12729	RELEASED FOR PRODUCTION	1/14/03	CJB

THE INFORMATION CONTAINED IN THIS DOCUMENT
IS PROPRIETARY TO E-SWITCH AND IS
NOT TO BE COPIED OR TRANSFERRED

E-SWITCH®

TITLE: 330.21 E1-1 BLK

SCALE	DATE	DR	DWG	REV
2:1	1/14/03	CB	XB0889P	A