SHEET OF

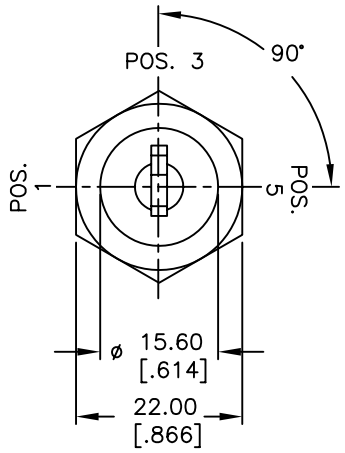

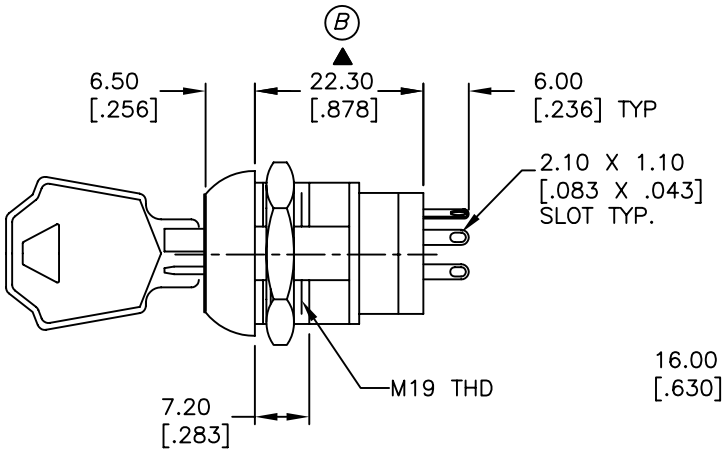

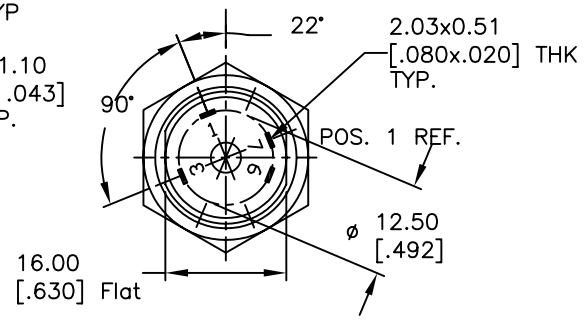

NOTES:

1. ALL DIMENSIONS IN MM [INCH]
2. GENERAL TOLERANCE: X.X=±0.4
   X.XX=±0.25
3. TERM. NOS. FOR REF. ONLY
4. CONTACT RATING: 4A @125VAC/28VDC, 2A @250VAC
5. DIELECTRIC STRENGTH: 1KV RMS min. at sea level
6. ELECTRICAL LIFE: 10,000 make–and–break cycles at full load.
7. MATERIALS:
   CONTACTS: Silver Plated CU (Q Contact material)
   TERMINALS: GOLD Plated Cu (Q Contact material)
   MOUNTING NUT: Nickel Plated zinc alloy
   CONTACT SPRING: Piano Wire
   KEYS (2): Brass
   LOCK: Bright NI plated zinc alloy with NI facing
   TUMBLER Mechanism: 4–disc tumbler cylinder.
8. Ⓑ▲ DENOTES CRITICAL PARAMETER

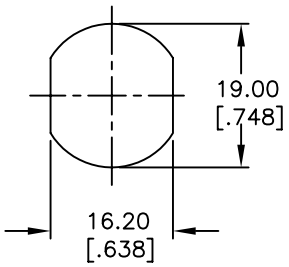

RECOMMENDED PANEL LAYOUT

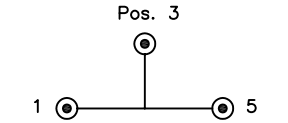

CIRCUIT: SP (90°/90° INDEXING)
CONTACT CONFIGURATION

Ⓑ▲

SWITCH FUNCTION		
CONNECTED TERMINAL #		
POS. 1	POS. 3	POS. 5
6–7	7–1	1–3

LEGEND

◉ =Key pull possible in these positions

REV.	ECN No.	DESCRIPTION	DATE	CHKD
B	15325	UPDATES NOTED WITH Ⓑ	9/23/05	PH
A	14153	RELEASED FOR PRODUCTION	7/7/04	AR

THE INFORMATION CONTAINED IN THIS DOCUMENT IS PROPRIETARY TO E-SWITCH AND IS NOT TO BE COPIED OR TRANSFERRED

E-SWITCH®

TITLE: K0130Z4A126Ⓑ

SCALE	DATE	DR	DWG	REV
1:1	7/7/04	AR	K200261	B