SHEET 1 OF 1

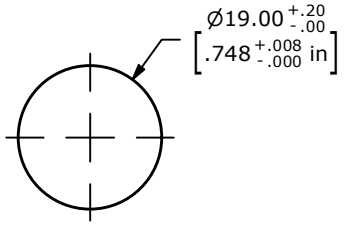

RECOMMENDED PANEL CUTOUT
MAX. PANEL THICKNESS
11.0 [.43 in]

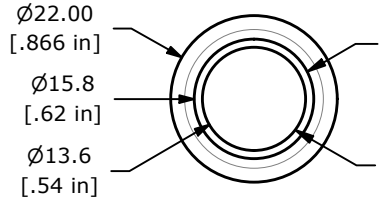

▲ RING
ILLUMINATION COLOR:
BLUE

▲ FLAT
ACTUATOR FINISH:
STAINLESS STEEL



▲

SWITCH FUNCTION	
POS. 1	POS. 2
ON	ON
1-3	1-2

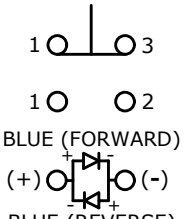

▲ SPDT
CONTACT CONFIGURATION

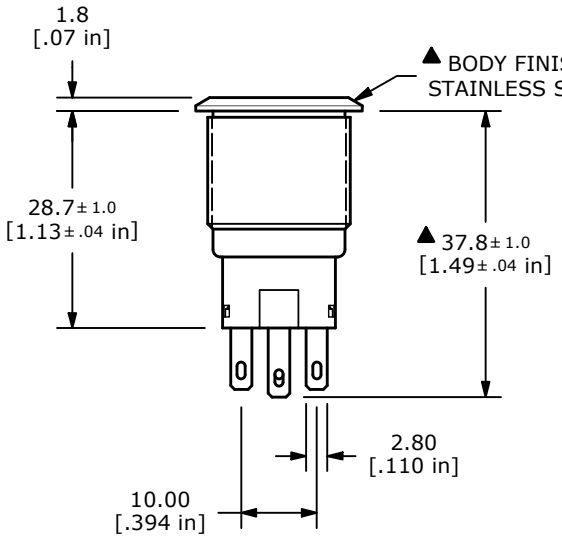

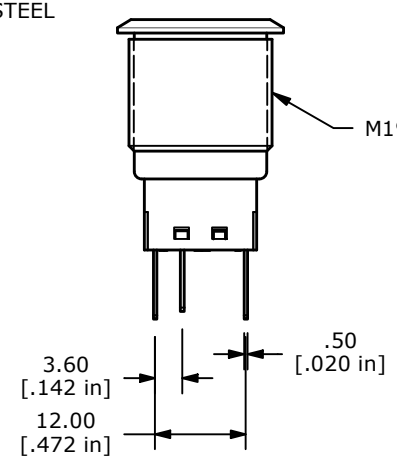

NOTE:
1. ALL DIMENSIONS IN MM [INCH]
2. GENERAL TOLERANCE: X.X = ±0.4
   X.XX = ±0.25
3. TERMINAL NUMBERS FOR REF ONLY
▲ 4. CONTACT MATERIAL: GOLD
5. RATING: 2A 24VDC
6. ELECTRIC LIFE: 50,000 MAKE-AND-BREAK CYCLES AT FULL LOAD.
7. INSULATION RESISTANCE: 1,000 MΩ MIN.
8. DIELECTRIC STRENGTH: 2,000 VAC MIN. FOR 1 MINUTE
9. CONTACT RESISTANCE: 50mΩ MAX. @ 1A 12VDC
10. OPERATING TEMP.: -40°C TO 85°C
11. TRAVEL: 2.8 [.11 in]
12. ▲ DENOTES CRITICAL PARAMETER
13. INGRESS PROTECTION: IP67
▲ 14. HARDWARE SUPPLIED: O-RING AND HEXNUT
▲ 15. ILLUMINATION VOLTAGE: 2.8V

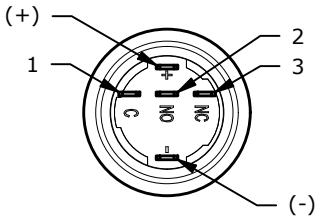

REV	ECO NO	DESCRIPTION	DATE	BY
B	ECO-103865	PV4 SERIES UPDATE	01/14/26	MR

THE INFORMATION CONTAINED IN THIS DOCUMENT IS PROPRIETARY TO E-SWITCH AND IS NOT TO BE COPIED OR TRANSFERRED

E·SWITCH®

OBJECT ID 100126692

TITLE PV4F230SSG-341

SCALE	DATE	DR	DWG	REV
1:1	1/25/2024	JS	52-PV4F230SSG341	B