SHEET 1 OF 1

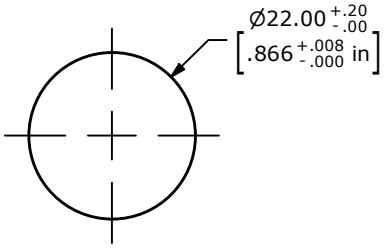

RECOMMENDED PANEL CUTOUT
MAX. PANEL THICKNESS 8mm

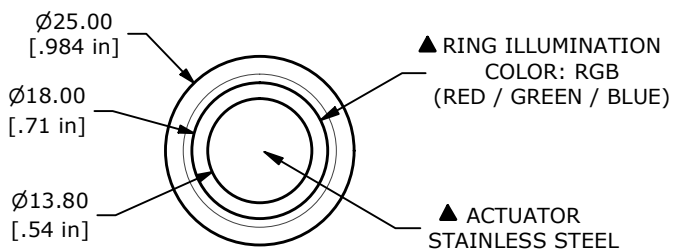

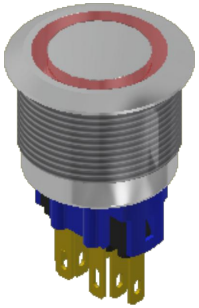

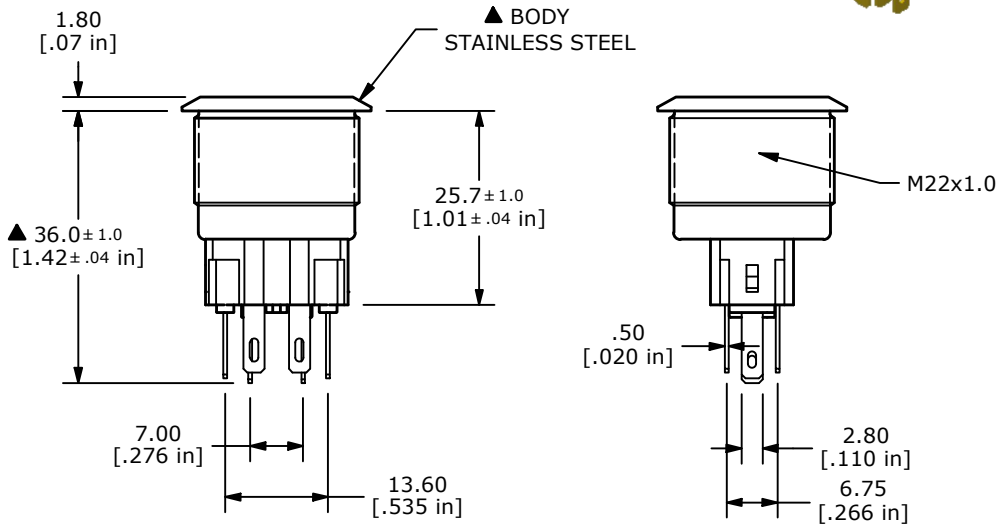

▲ SWITCH FUNCTION	
POS. 1	POS. 2
1-2 ON 3-4 OFF	1-2 (OFF) 3-4 (ON)

( ) MOMENTARY FUNCTION

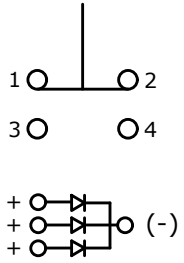

▲ SPDT ON-(OFF) / OFF-(ON)
CONTACT CONFIGURATION
( ) DENOTES MOMENTARY FUNCTION

NOTE:
1. ALL DIMENSIONS IN MM [INCH]
2. GENERAL TOLERANCE: X.X = ± 0.4
   X.XX = ± 0.25
3. TERMINAL NUMBERS FOR REF. ONLY
4. RATING: 2A @ 48VDC
5. CONTACT RESISTANCE: 50mΩ MAX. @ 1A 12VDC
6. INSULATION RESISTANCE: 1,000MΩ @ 500VDC
7. DIELECTRIC STRENGTH: 2,000VAC MIN. FOR 1 MINUTE
8. ELECTRICAL LIFE: 50,000 CYCLES
9. OPERATING TEMPERATURE: -35°C to 85°C
10. INGRESS PROTECTION: IP65
11. ▲ DENOTES CRITICAL PARAMETER
▲12. HARDWARE INCLUDED (NOT SHOWN) HEX NUT AND O-RING
▲13. ILLUMINATION VOLTAGE: 24V

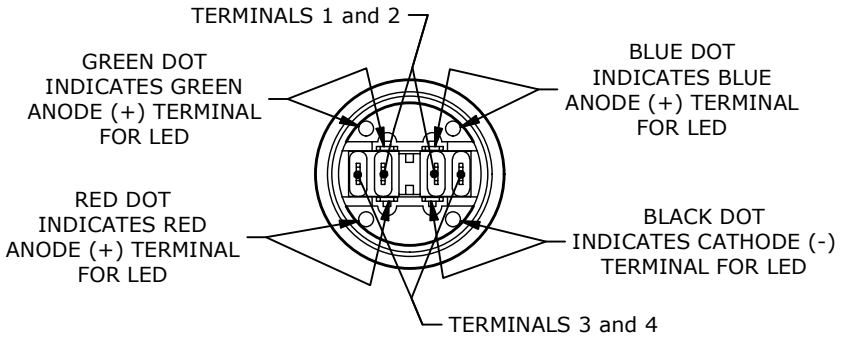

REV	ECO NO	DESCRIPTION	DATE	BY
B	ECO-103874	Print update	01/16/26	MW

THE INFORMATION CONTAINED IN THIS DOCUMENT IS PROPRIETARY TO E-SWITCH AND IS NOT TO BE COPIED OR TRANSFERRED

E·SWITCH®

OBJECT ID 000003040

TITLE PV7F2Y0SS-3R5

SCALE	DATE	DR	DWG	REV
1:1	3/4/2019	MW	52-PV7F2Y0SS3R5	B