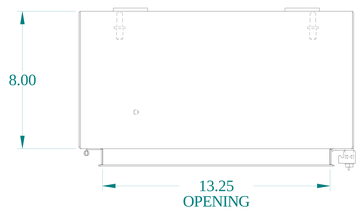

TOP VIEW
(DOOR REMOVED)

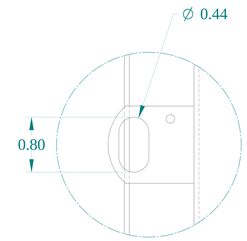

DETAIL Z

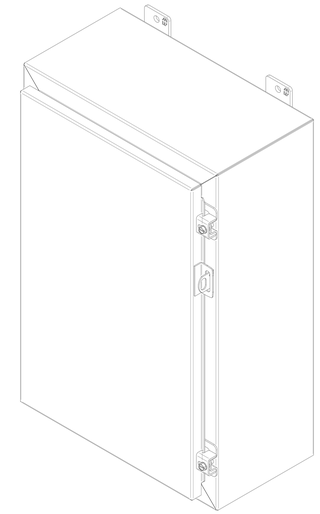

ISOMETRIC VIEWS

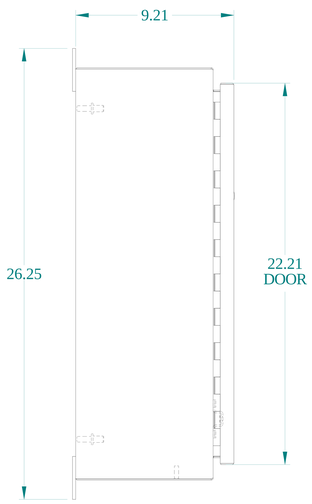

SIDE VIEW

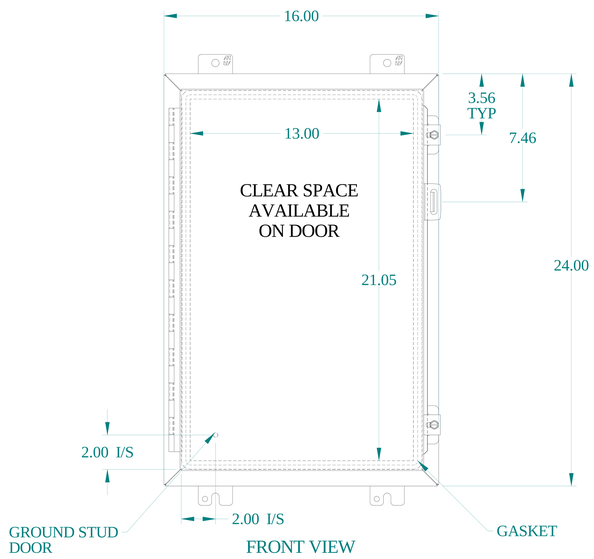

FRONT VIEW

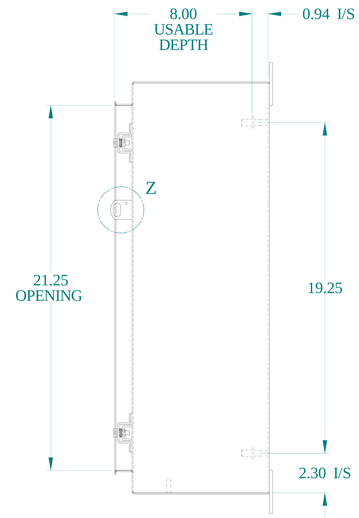

SIDE VIEW
(DOOR REMOVED)

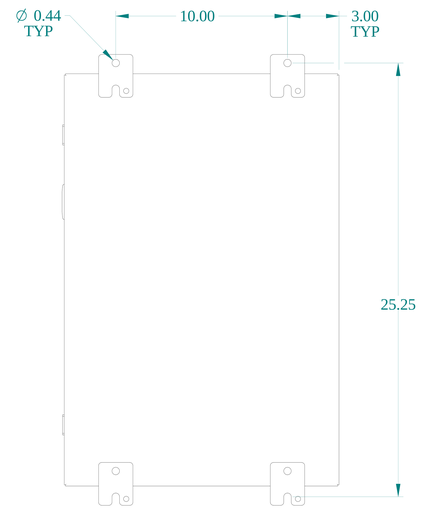

BACK VIEW

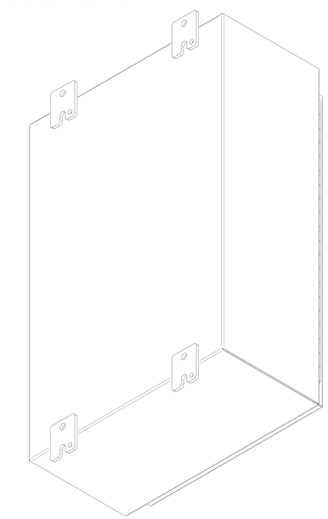

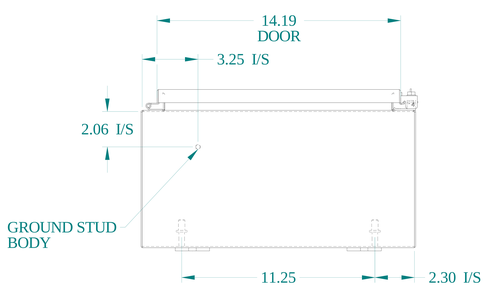

BOTTOM VIEW

HAMMOND MANUFACTURING®

www.hammondmfg.com

Data subject to change without notice.

Part # : 1418H8LP	Date : Feb. 20, 2026

Link:www.hammfg.com/1418H8LP