DIMENSIONS:	
A	0.300" ±0.030
B	0.400" ±0.030
C	1.400" ±0.030
D	0.041" x 0.018" ±0.005
E	0.920" ±0.030
F	0.040" ±0.005
G	0.234" ±0.005

DIMENSIONS:	
H	1.410" ±0.030
J	0.300" ±0.030
K	0.770" ±0.030
L	1.875" ±0.030
M	0.330" ±0.030
N	1.220" ±0.030
W	1.563" ±0.030

DIMENSIONS:	
P	0.150" ±0.015
Q	1.251" ±0.030
R	0.125" ±0.015

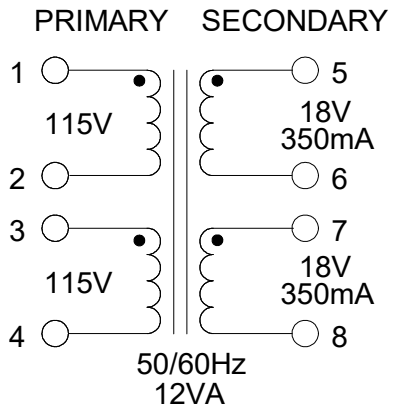

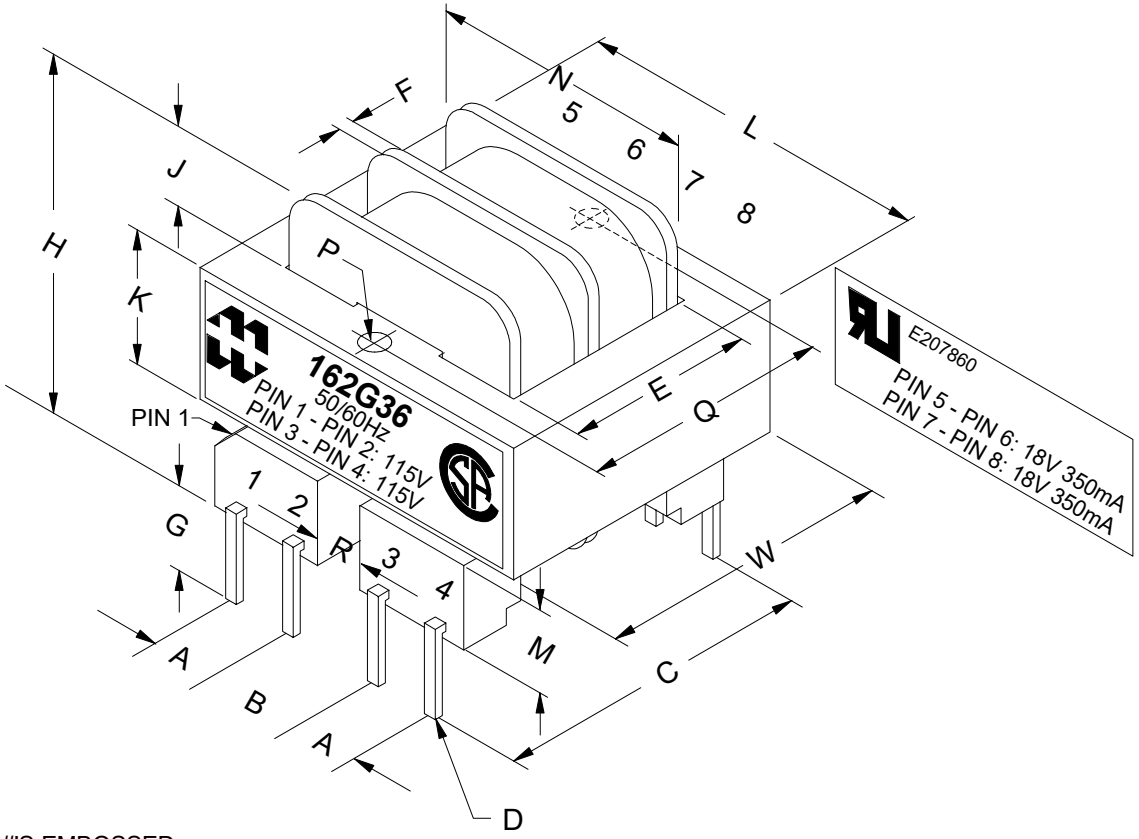

PIN #'S EMBOSSED
ON BOBBIN FLANGE

ELECTRICAL DATA:

TESTS	CONDITIONS	ACCEPTANCE CRITERIA	
Iex	@ 115V, 60Hz, PIN 1 - PIN 2	70.8mA	Max.
Sec. N.L.V	@ 115V, 60Hz, PIN 1 - PIN 2		
	PIN 3 - PIN 4 =	115.0V	±2%
	PIN 5 - PIN 6 =	21.66V	±2%
	PIN 7 - PIN 8 =	21.66V	±2%
DCR	@ 20°C, PIN 1 - PIN 2 =	106.1 Ω	±20%
	@ 20°C, PIN 3 - PIN 4 =	106.1 Ω	±20%
	@ 20°C, PIN 5 - PIN 6 =	3.908 Ω	±20%
	@ 20°C, PIN 7 - PIN 8 =	3.908 Ω	±20%
HIPOT	PRIMARY - SECONDARY	2500V, 60Hz, 1 SEC	

REV.#	REVISION		DATE
0	RELEASED.	C.I.	03/27/24

HAMMOND MANUFACTURING™
ELECTRONIC DIVISION
52 RANKIN PLACE,
WATERLOO, ONTARIO, N2J 3Z5
PH # (519) 886-6181
FAX # (519) 886-9540

DWG. BY: C. ILIE	CHK'D BY:	TITLE: PC BOARD MOUNT POWER TRANSFORMER	DWG. NO. 162G36
DATE: 03/27/24	APP'D. BY:		
	DIMENSIONS: IN(X) MM( )		