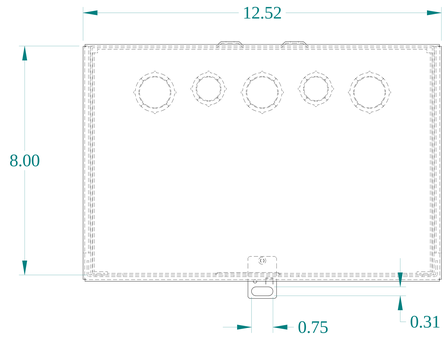


TOP VIEW

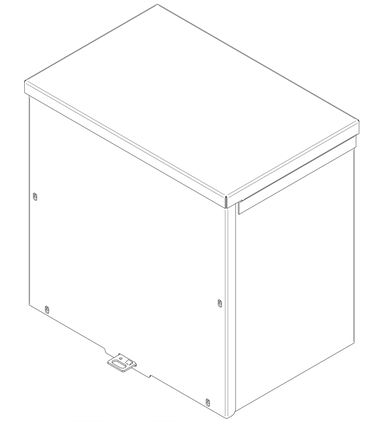

ISOMETRIC VIEWS

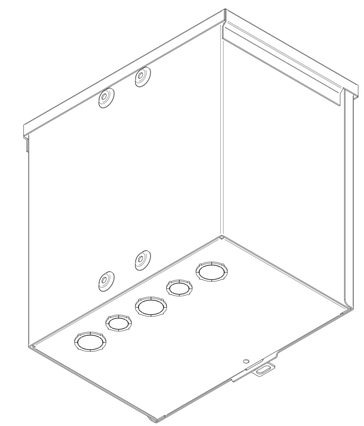

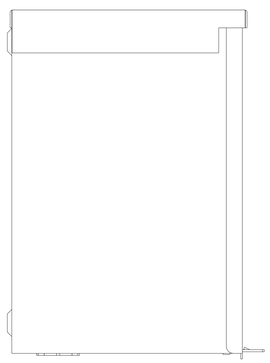

SIDE VIEW

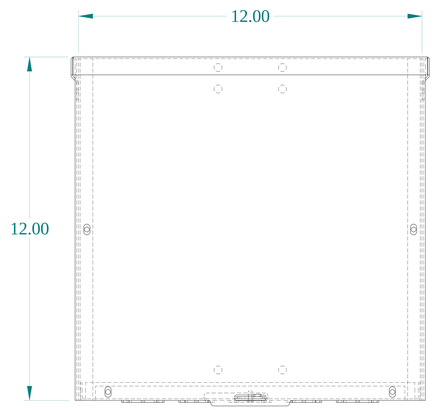


FRONT VIEW

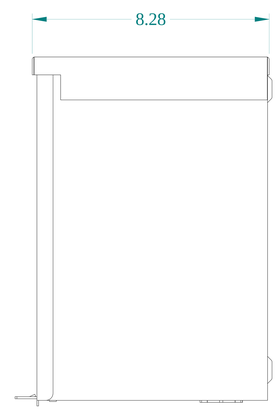


SIDE VIEW

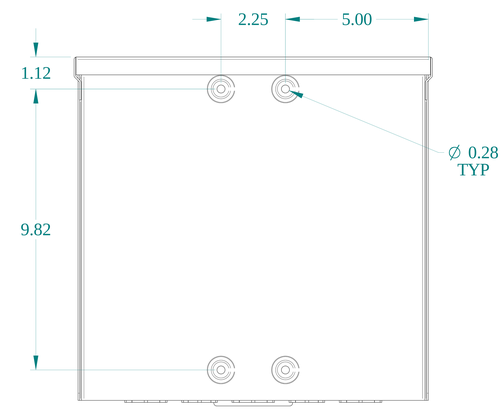


BACK VIEW

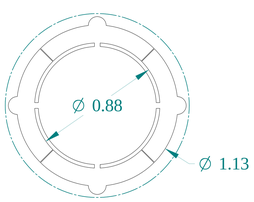


DETAIL Y
TYP

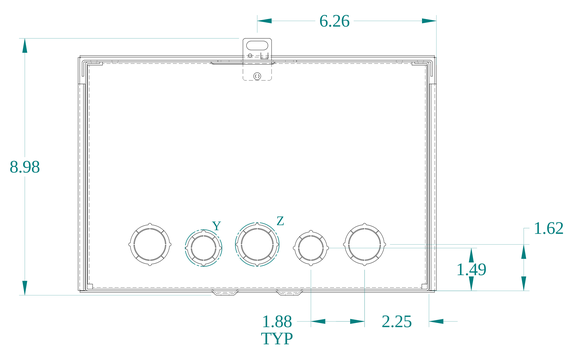


BOTTOM VIEW

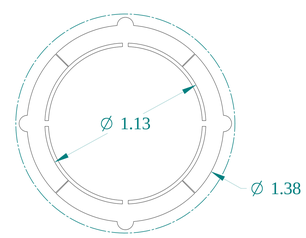


DETAIL Z
TYP

HAMMOND MANUFACTURING®

www.hammondmfg.com

Data subject to change without notice.

| | |
|---|---|
| Part # : C3R12128SC | Date : Jul. 8, 2026 |

Link:www.hammfg.com/C3R12128SC