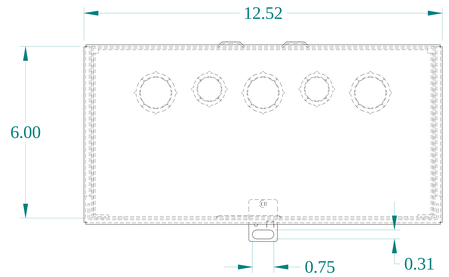

TOP VIEW

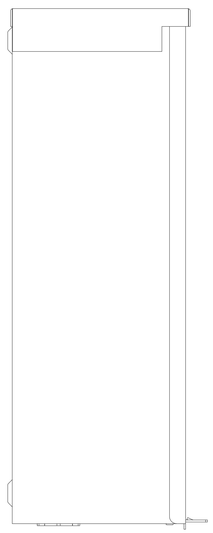

SIDE VIEW

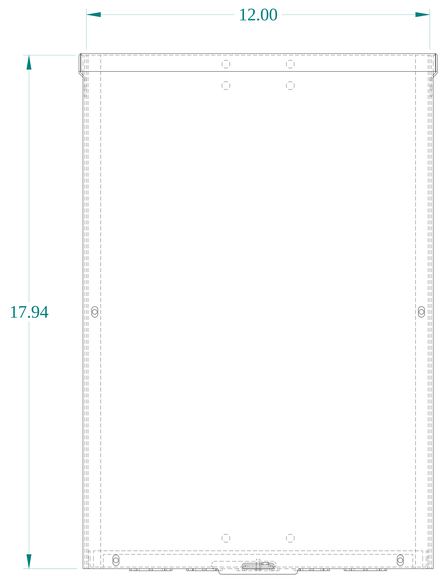

FRONT VIEW

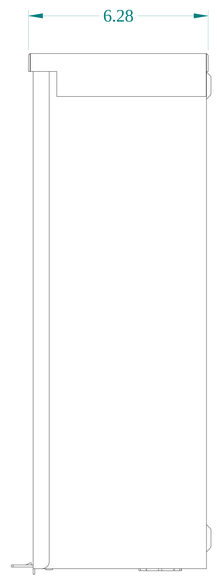

SIDE VIEW

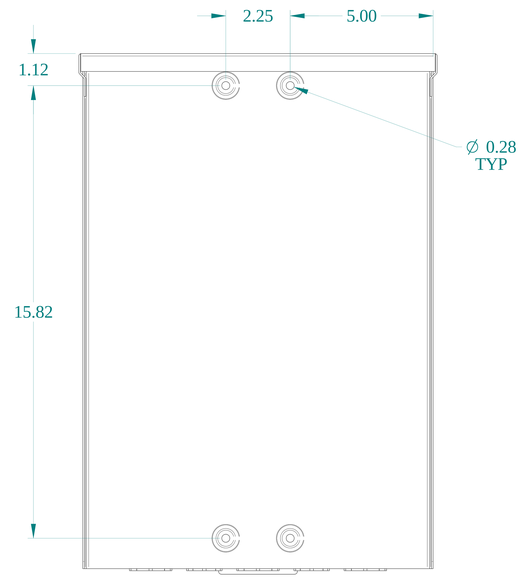

BACK VIEW

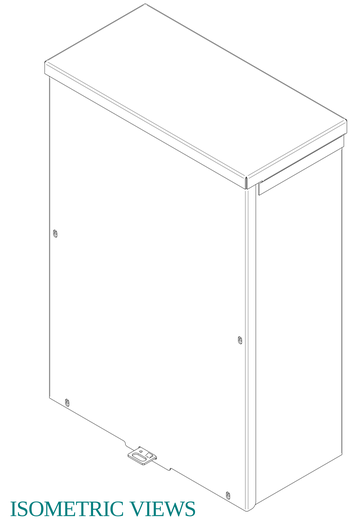

ISOMETRIC VIEWS

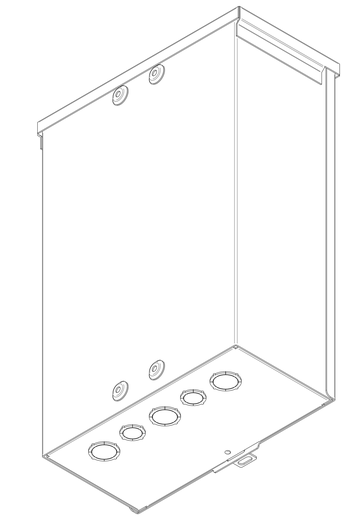

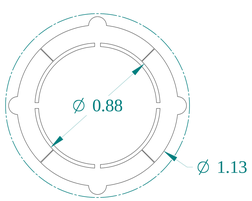

DETAIL Y
TYP(2)

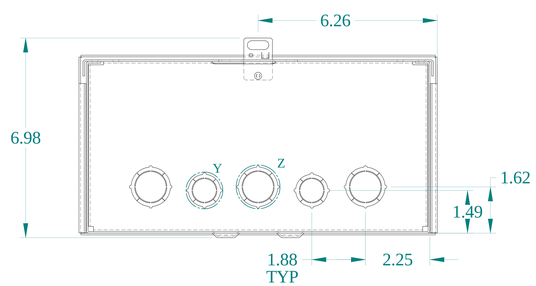

BOTTOM VIEW

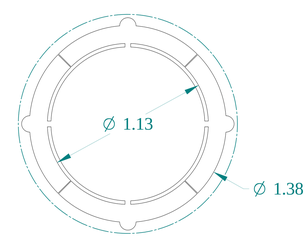

DETAIL Z
TYP(3)

HAMMOND MANUFACTURING®

www.hammondmfg.com

Data subject to change without notice.

Part # : C3R18126SC	Date : Jul. 8, 2026

Link:www.hammfg.com/C3R18126SC