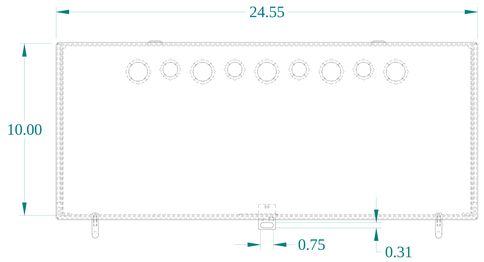

TOP VIEW

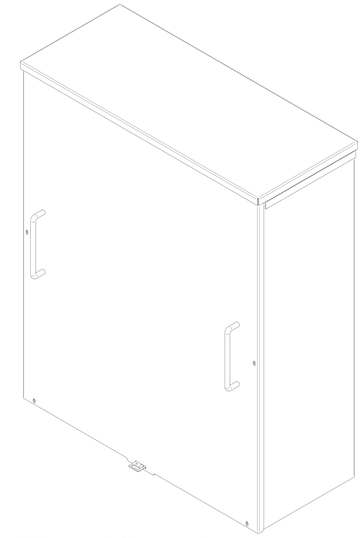

ISOMETRIC VIEWS

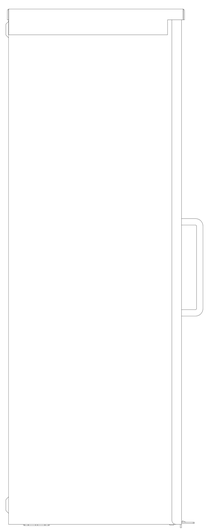

SIDE VIEW

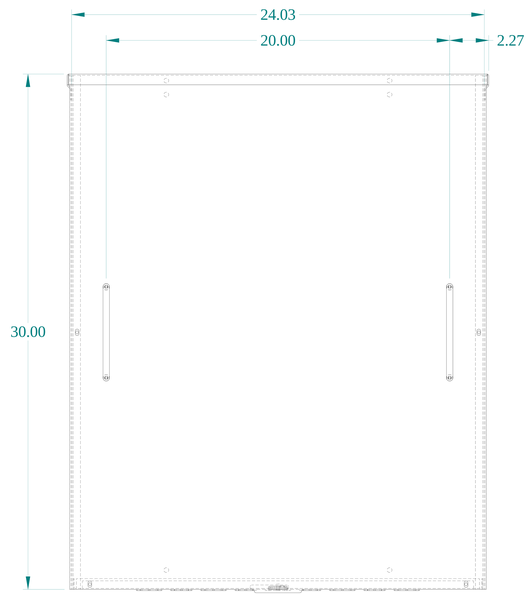

FRONT VIEW

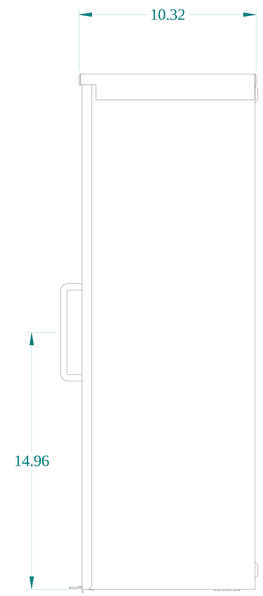

SIDE VIEW

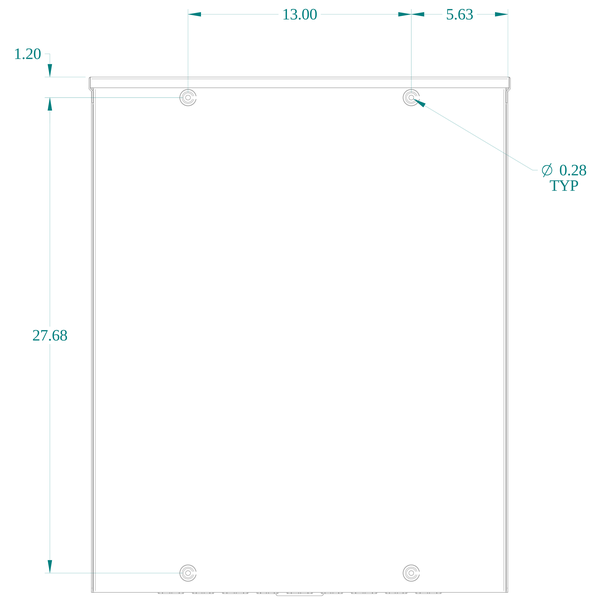

BACK VIEW

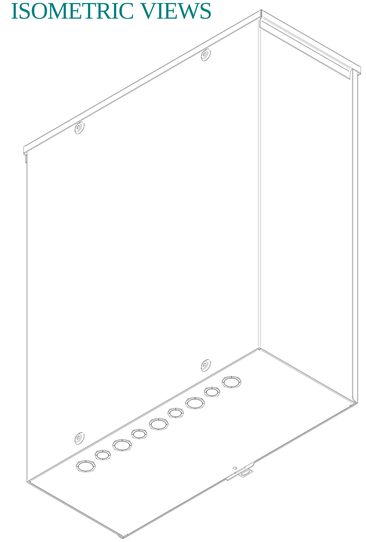

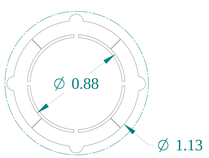

DETAIL Y
TYP(4)

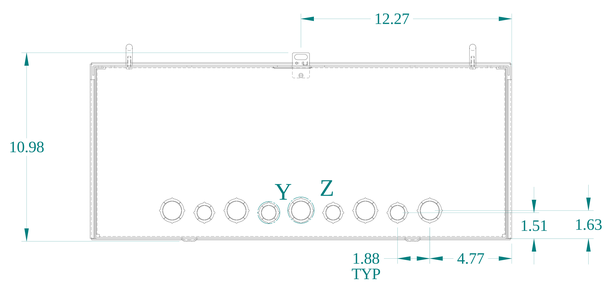

BOTTOM VIEW

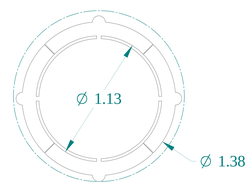

DETAIL Z
TYP(5)

HAMMOND MANUFACTURING®

www.hammondmfg.com

Data subject to change without notice.

Part # : C3R302410SC	Date : Jul. 9, 2026

Link:www.hammfg.com/C3R302410SC