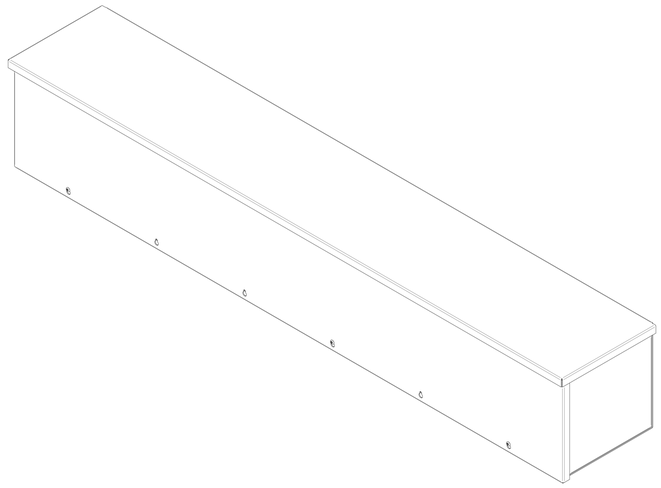

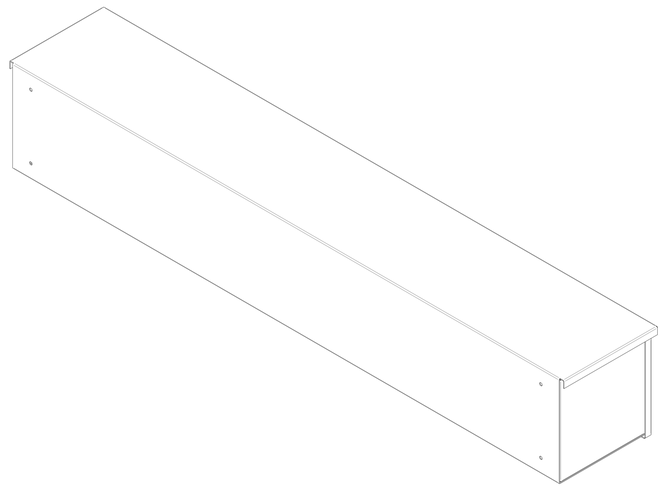

ISOMETRIC VIEW

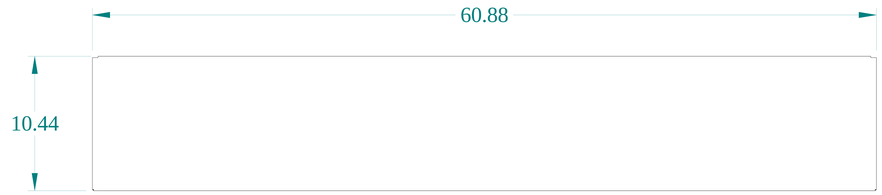

TOP VIEW

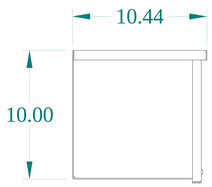

SIDE VIEW

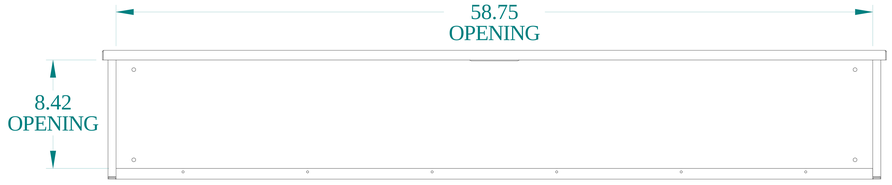

FRONT VIEW

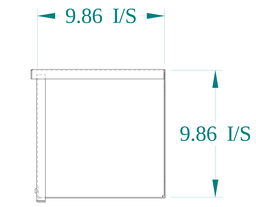

SIDE VIEW

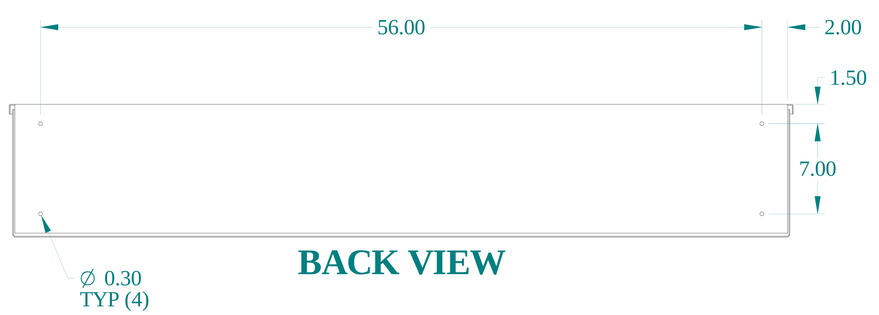

BACK VIEW

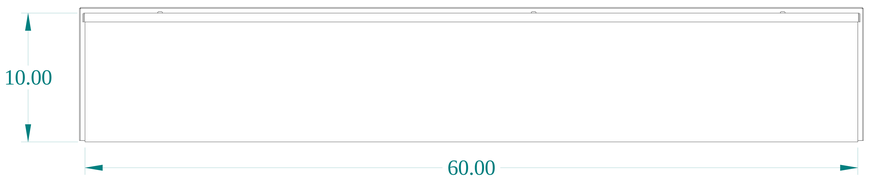

BOTTOM VIEW

HAMMOND MANUFACTURING®

www.hammondmfg.com

Data subject to change without notice.

Part # : C3RWT1060G	Date : Aug. 7, 2026

Link:www.hammfg.com/C3RWT1060G