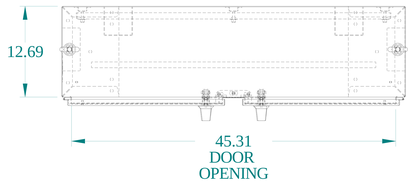

TOP VIEW

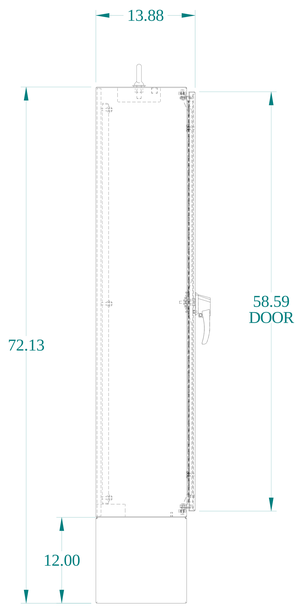

SIDE VIEW

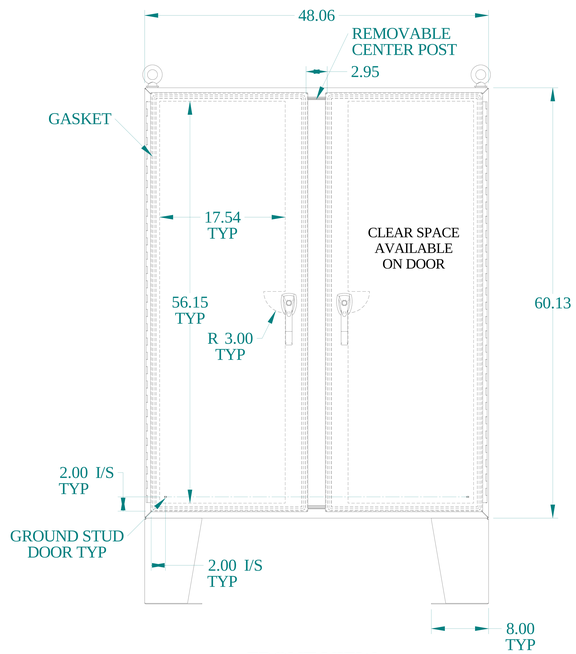

FRONT VIEW

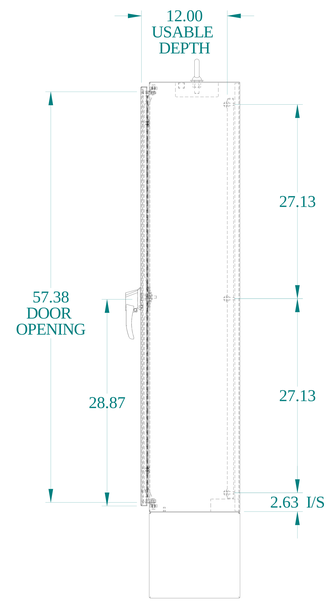

SIDE VIEW

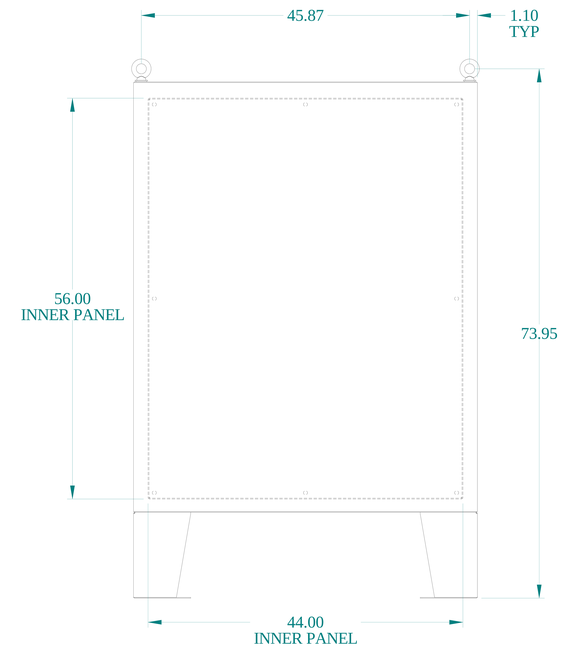

BACK VIEW

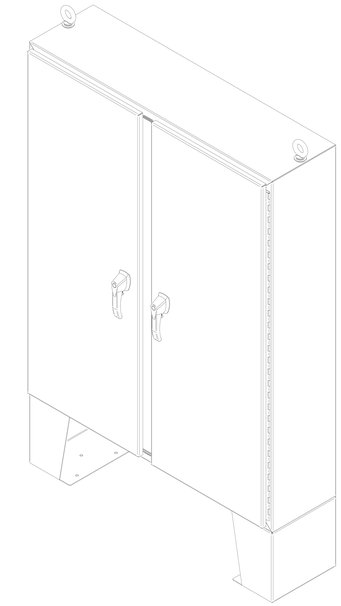

ISOMETRIC VIEWS

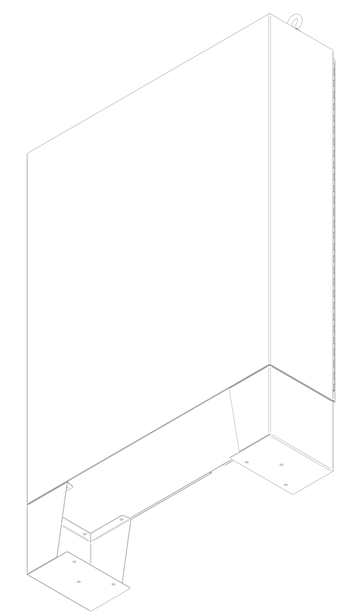

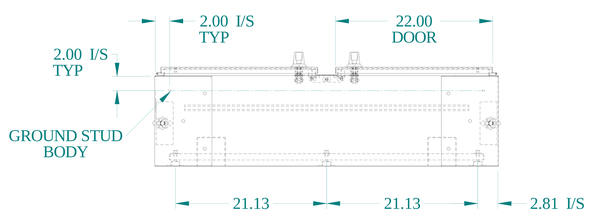

BOTTOM VIEW

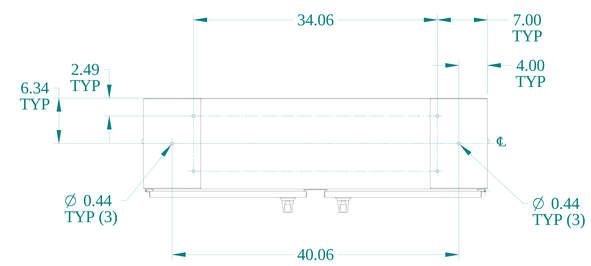

MOUNTHING FEET - DETAIL

HAMMOND MANUFACTURING®

www.hammondmfg.com

Data subject to change without notice.

Part # : HN4FM604812SS	Date : Jul. 23, 2025

Link:www.hammfg.com/HN4FM604812SS