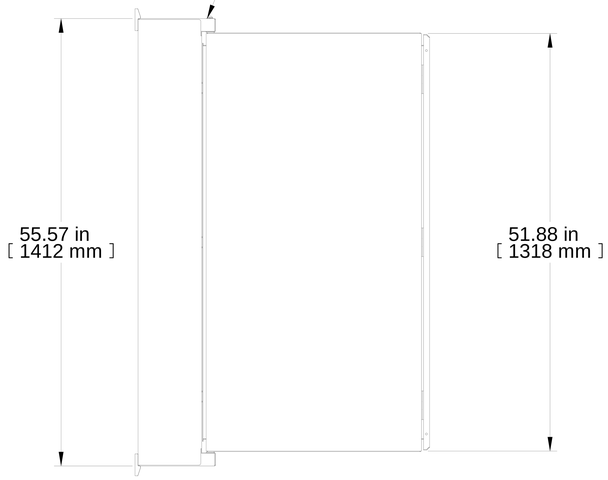

L.S. VIEW

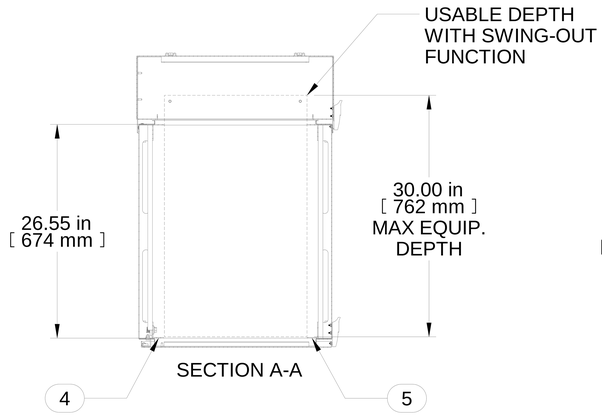

SECTION A-A

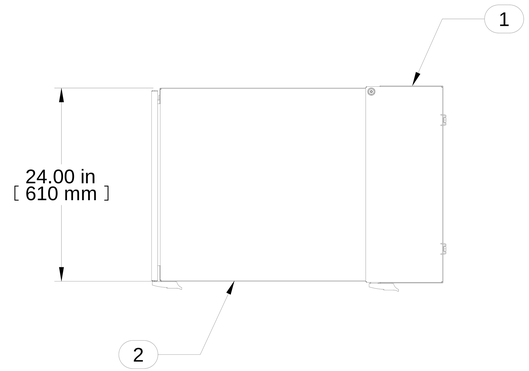

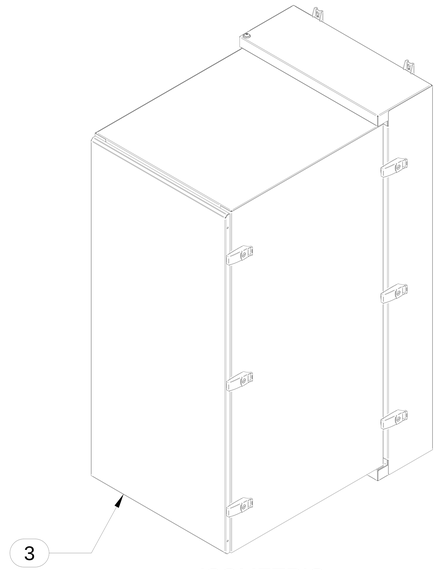

ISOMETRIC

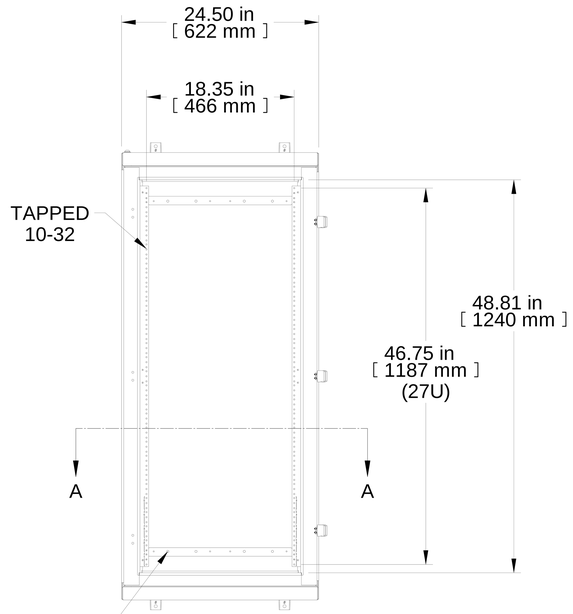

FRONT VIEW

POWER BAR
MOUNTING
WITHOUT USING
'U' SPACE

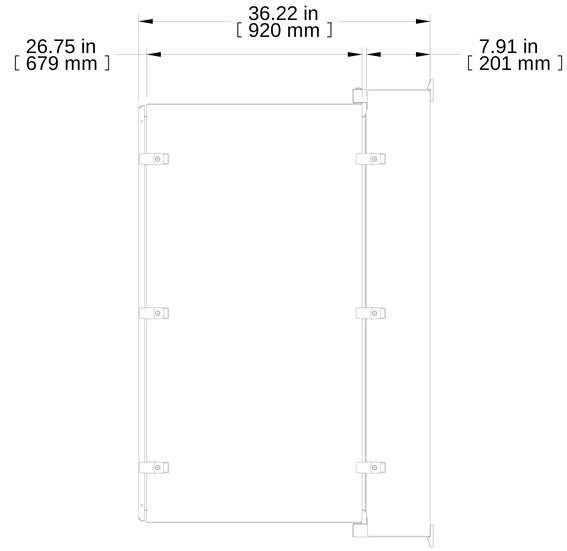

R.S. VIEW

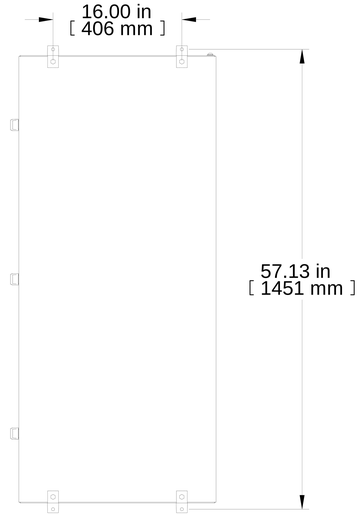

REAR VIEW

Item Number	Title	Quantity
1	24W 27U NWC - REAR ASSY	1
2	24W 27U NWC - CENTRE	1
3	24W 27U NWC - SOLID DOOR	1
4	H1 PANEL RAIL LH	2
5	H1 PANEL RAIL RH	2

PART NUMBERS

NWC27U2436SN	PAINTED BLACK TEXTURED

NOTES

Solid Door Included

See Hammond Website for Additional Accessories

Français

Pour tous les détails sur nos produits,
svp veuillez consulter notre site www.hammondmfg.com

Data subject to change without notice. Isometric drawing not to scale.
Les données sont sujettes à changement sans préavis.

HAMMOND MANUFACTURING®

www.hammondmfg.com

PART NO. NWC27U2436SNBK