Product data sheet

Specifications



Solid state relay, Easy Harmony Solid State Relays, input 5 to 24VDC, output 24 to 240VAC, 75A, zero cross switching

SSP1A175BDE

Product availability: Stock - Normally stocked in distribution facility

Main

Range of Product	Harmony Solid State Relays
Provided accessory	Thermal pad
Product or Component Type	Solid state relay up to 75 A
Device short name	SSP1E
Mounting Support	Panel
Number of phases	1 phase
Contacts type and conifguration	1 NO
Line Rated Current	75 A
Solid state output type	SCR output
Output switching mode	Zero voltage switching

Complementary

test button	Electronic controller
[Uc] control circuit voltage	4...32 V DC
Minimum switching voltage	4 V DC turn-on
Maximum switching voltage	2 V DC turn-off
Response time	0.5 cycle (turn-on)
Load current	1…75 A
Transient overvoltage	530 V
Surge current	750 A 1/2 Cycle
Maximum I²t for fusing	2500 A².s for 10 ms at 50 Hz
Maximum leakage current	1 mA off-state
Maximum voltage drop	<1.6 V on-state
DV/dt	500 V/µs off-state at maximum voltage
Power factor	0.8 (with maximum load)
Insulation resistance	500 MOhm at 500 V DC
Dielectric strength	3.8 kV AC for input/output 2 kV AC for output connection
[Uimp] rated impulse withstand voltage	8 kV output to case 6 kV input to output
Tightening torque	1.5...1.7 N.m for input 2...2.4 N.m for output

Price is “List Price” and may be subject to a trade discount – check with your local distributor or retailer for actual price.

Disclaimer: This documentation is not intended as a substitute for and is not to be used for determining suitability or reliability of these products for specific user applications

Connections - terminals	Screw terminals 0.2...3.3 mm², 24 AWG...12 AWG) with cable end Screw terminals 0.5...5.26 mm², 20 AWG...10 AWG) with cable end Screw terminals 0.2...3.3 mm², 24 AWG...12 AWG) without cable end Screw terminals 0.5...8.26 mm², 20 AWG...8 AWG) without cable end Forked type tag connectors 9.2 x 4 mm Ring lugs 9.2 x 4 mm Forked type tag connectors 11.7 x 4.5 mm Ring lugs 11.7 x 4.5 mm
LED indicator	LED, green input
IP degree of protection	IP10
Net Weight	4.06 oz (115 g)
Width	2.3 in (59 mm)
Height	1.8 in (45 mm)
Depth	1.1 in (29 mm)
Device presentation	Complete product

Environment

Ambient Air Temperature for Operation	-22…176 °F (-30…80 °C)
Ambient Air Temperature for Storage	-22…212 °F (-30…100 °C)
Pollution degree	2
Overvoltage category	III
Product Certifications	UL CE UKCA TÜV RoHS REACH
Marking	UL CE UKCA TÜV
Standards	UL 508 EN/IEC 60947-4-3 EN/IEC 62314 CSA C22.2 No 14

Ordering and shipping details

Category	US10CP222375
Discount Schedule	0CP2
GTIN	3606487050643
Returnability	Yes
Country of origin	CN

Packing Units

Unit Type of Package 1	PCE
Nbr. of units in pkg.	1
Package 1 Height	2.362 in (6.000 cm)
Package 1 Width	1.181 in (3.000 cm)
Package 1 Length	1.772 in (4.500 cm)
Package weight(Lbs)	4.691 oz (133.000 g)

Unit Type of Package 2	BB1
Number of Units in Package 2	8
Package 2 Height	1.575 in (4.000 cm)
Package 2 Width	5.118 in (13.000 cm)
Package 2 Length	7.480 in (19.000 cm)
Package 2 Weight	2.478 lb(US) (1.124 kg)
Unit Type of Package 3	S02
Number of Units in Package 3	64
Package 3 Height	5.906 in (15.000 cm)
Package 3 Width	11.811 in (30.000 cm)
Package 3 Length	15.748 in (40.000 cm)
Package 3 Weight	20.585 lb(US) (9.337 kg)

Contractual warranty

Warranty (in months)	18

Environmental Data

Schneider Electric aims to achieve Net Zero status by 2050 through supply chain partnerships, lower impact materials, and circularity via our ongoing “Use Better, Use Longer, Use Again” campaign to extend product lifetimes and recyclability.

Environmental Data explained >

How we assess product sustainability >

Environmental footprint

Total lifecycle Carbon footprint	**3 418 kg CO2 eq.**
Carbon footprint of the manufacturing phase [A1 to A3]	**2 kg CO2 eq.**
Carbon footprint of the distribution phase [A4]	**0 kg CO2 eq.**
Carbon footprint of the installation phase [A5]	**0 kg CO2 eq.**
Carbon footprint of the use phase [B2, B3, B4, B6]	**3 415 kg CO2 eq.**
Carbon footprint of the end-of-life phase [C1 to C4]	**0.1 kg CO2 eq.**
Environmental Disclosure	**Product Environmental Profile**

Use Better

Materials and Substances

Packaging made with recycled cardboard	**No**
Packaging without single use plastic	**No**
EU RoHS Directive	**Compliant By Exemption**
REACh Regulation	**Reference contains Substances of Very High Concern above the threshold**
California proposition 65	**WARNING: This product can expose you to chemicals including: Lead and lead compounds, which is known to the State of California to cause cancer and birth defects or other reproductive harm. For more information go to www.P65Warnings.ca.gov**

Use Again

Repack and remanufacture

Circularity Profile	**End of Life Information**
Take-back	**No**

Technical Description

Description

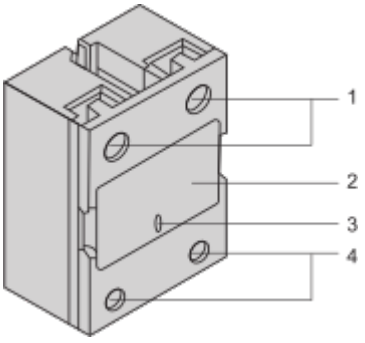

(1) Load output connection screw terminals.
(2) Indication area for product label or markings.
(3) Control input voltage LED indicator.
(4) Control input connection screw terminals.

Mounting and Clearance

Mounting

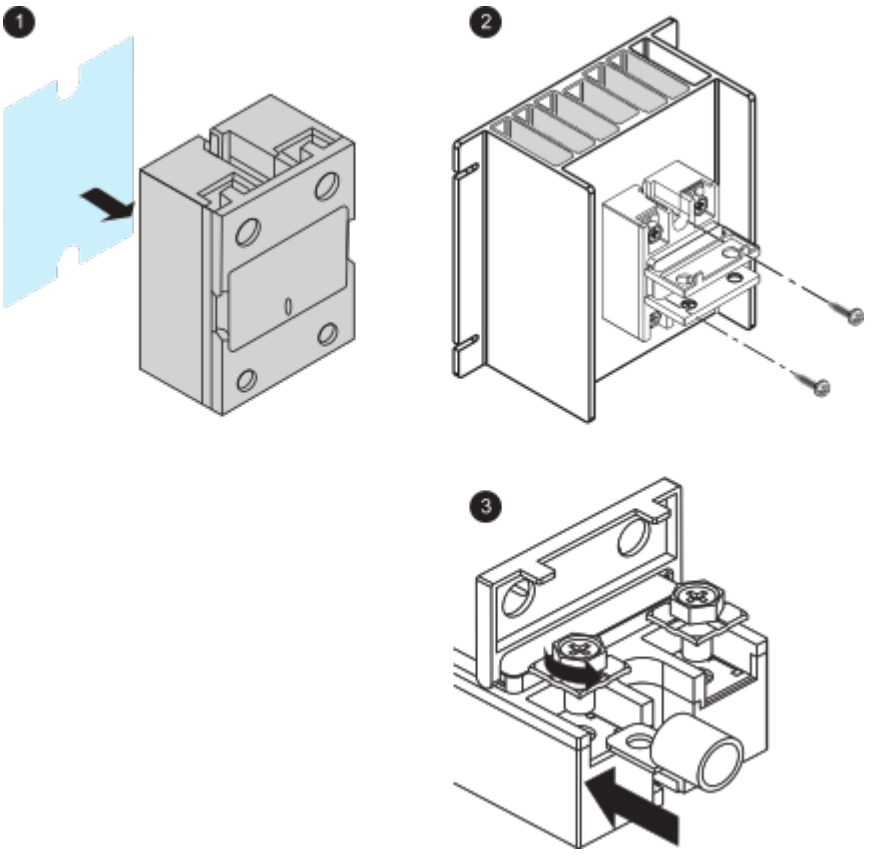

NOTE 1: Tear the films on both side of the thermal pad and attach one side to the metal back of the relay.
NOTE 2: Attach the relay to the heatsink. Heatsink fins should always be positioned in vertical orientation in order to ensure proper heat ventilation. The product may be hot, please allow time for product to cool before touching.
NOTE 3: Maximum screw torque follow the spec using less than 500 RPM electric / pneumatic screwdriver. Fully un-tightened the screw for lug installation.

Connections and Schema

Wiring

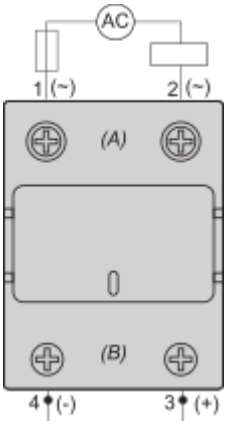

(A) LOAD
(B) INPUT

Image of product / Alternate images

Alternative

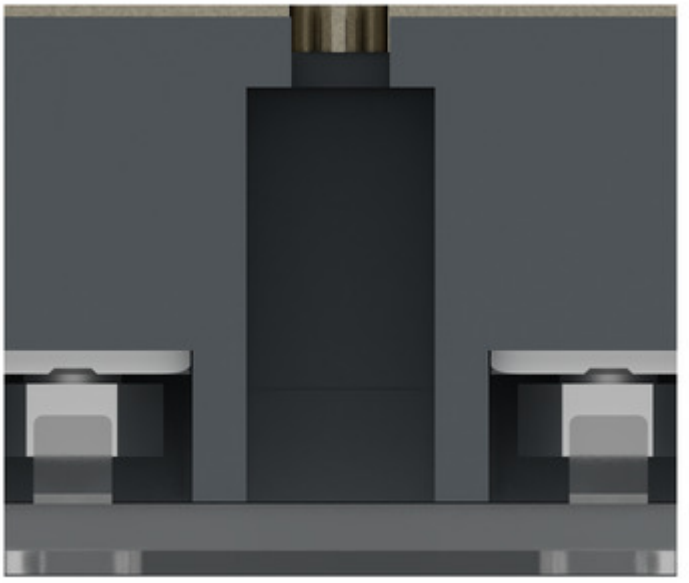





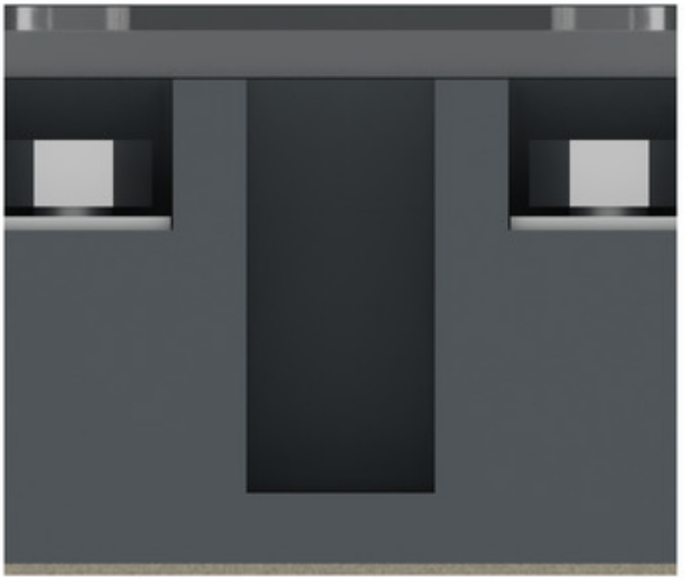


1
LOAD
2
SSP1A1●●●
Solid State Relays
Schneider Electric
LOAD
24-480VAC~ ●●A
INPUT
5-24VDC
IEC/EN 60947-4-3
8A-YY-WW-X-Z
-4
INPUT
3+

