MICRO SWITCH
FREEPORT, ILLINOIS, U.S.A.
A DIVISION OF HONEYWELL
FED. MFG. CODE 91929

SWITCH–ENCLOSED

CATALOG LISTING
BZE6–2RN7

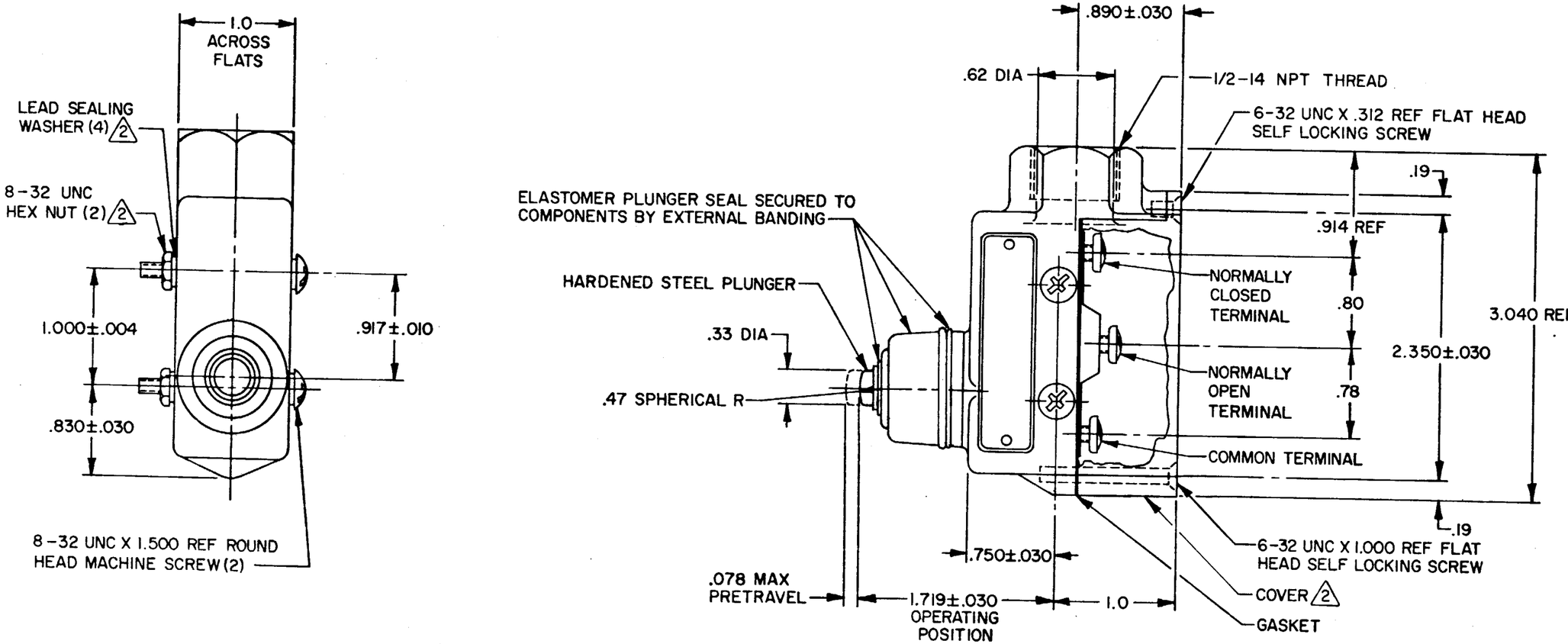

NOTES–

1 – 6–32 UNC X .219 REF BINDING HEAD TERMINAL SCREW AND CUPWASHER (3)
2 FURNISHED UNASSEMBLED

THIS DRAWING COVERS A PROPRIETARY ITEM AND IS THE PROPERTY OF MICRO SWITCH, A DIVISION OF HONEYWELL. THIS DRAWING IS NOT TO BE COPIED OR USED WITHOUT THE APPROVAL OF MICRO SWITCH.

CHARACTERISTICS	ELECTRICAL DATA	SCALE FULL
OPERATING FORCE ——— 9–24 OZ	CONTACT ARRANGEMENT S P D T	DO NOT SCALE PRINT
RELEASE FORCE ——— 4 OZ MIN	15A–125, 250 OR 480 VAC, 2A–600 VAC 1/8HP–125 VAC; 1/4HP–250 VAC CODE L74 1/2A–125 VDC; 1/4A–250 VDC	UNLESS OTHERWISE NOTED DIMENSIONS ARE IN INCHES TOLERANCES ARE: ONE PLACE (.0) ±.030 TWO PLACE (.00) ±.015 THREE PLACE (.000) ±.005 ANGLES ±
DIFFERENTIAL TRAVEL ——— .002 MAX		
OVERTRAVEL ——— .219 MIN		
BASIC SWITCH REPLACEMENT ——— BZ–2RN730		WEIGHT .56 LB

REPLACES
RELEASE NO.
DRAWING NUMBER M
ISSUE
CHECK
REVISIONS
A NEW DWG CO-15200 K S W 8 AUG 77
B CO38200 TMM 6 OCT 77
C CO 39504 GLH 29 NOV 77
D CO 53191-H T M M 18 MAY 84
E CO55989 J A P 8 NOV 84
F CO 54958-H WJM 8 FEB 85
G CO72476 MAM 4 SEP 92
H CO-77179A K D R 17 FEB 94
CHECK RDL 19 AUG 77
CHECK GCH 19 AUG 77
CHECK
DRAWN K S W 8 AUG 77
FO-5285 I-A