MICRO SWITCH
A DIVISION OF MINNEAPOLIS-HONEYWELL REGULATOR COMPANY
FREEPORT, ILLINOIS
FED. MFR. CODE 91929

SWITCH—ENCLOSED

CATALOG LISTING
BZV6-2RQ8

THIS DRAWING COVERS A PROPRIETARY ITEM AND IS THE PROPERTY OF MICRO SWITCH. A DIVISION OF HONEYWELL. THIS DRAWING IS NOT TO BE COPIED OR USED WITHOUT THE APPROVAL OF MICRO SWITCH.

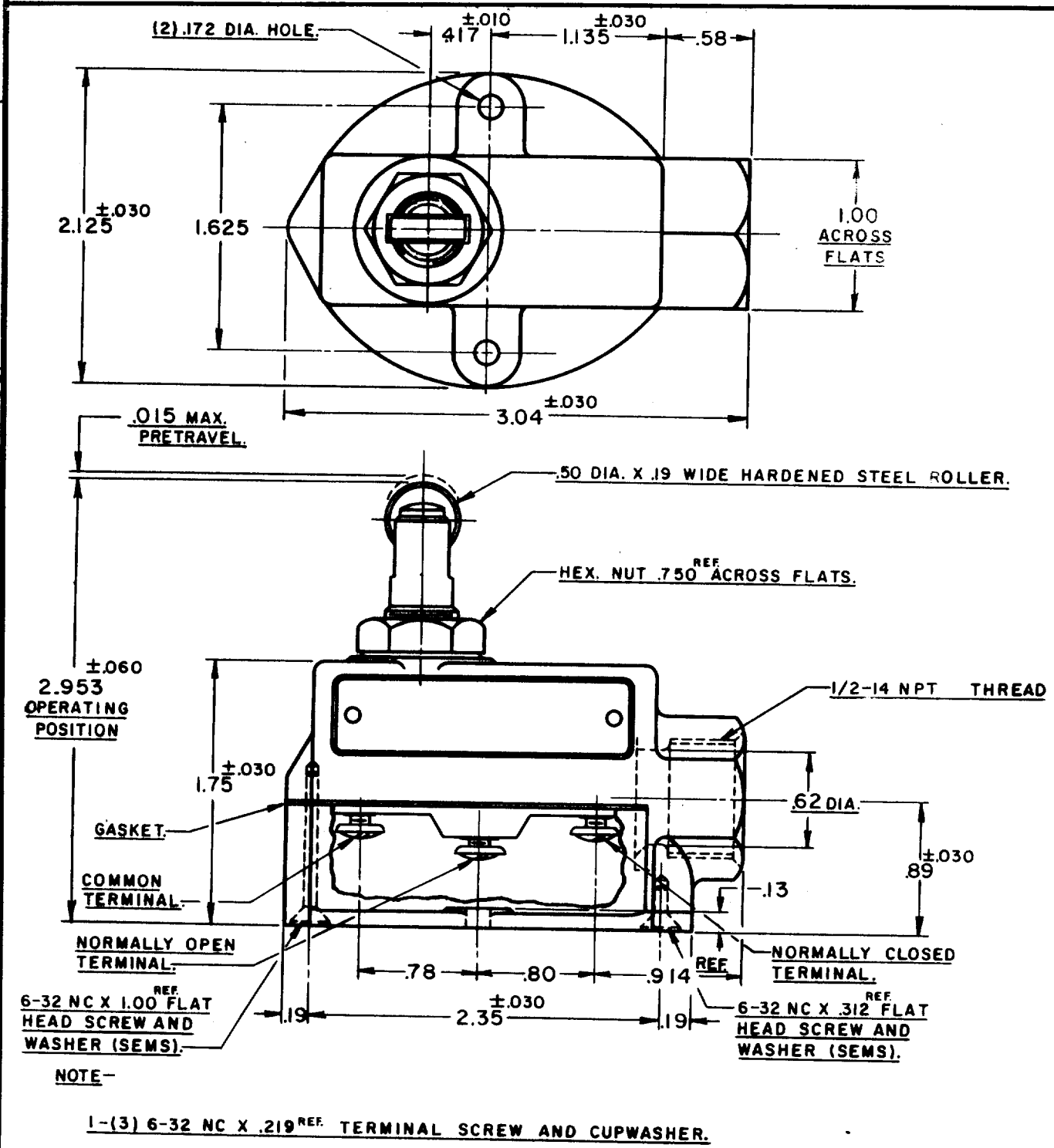

NOTE—

1-(3) 6-32 NC X .219 REF. TERMINAL SCREW AND CUPWASHER.

CHARACTERISTICS

OPERATING FORCE — — — — — 9-13 OZ.

RELEASE FORCE — — — — — 4 OZ. MIN.

DIFFERENTIAL TRAVEL — — — .002 MAX.

OVERTRAVEL — — — — — — — .140 MIN.

SWITCH-BASIC REPLACEMENT —BZ-2RQ784

ELECTRICAL DATA

CONTACT ARRANGEMENT
S. P. D.T.

—L74— 15A-125, 250 OR 480 VAC, 2A-600 VAC
1/8HP-125 VAC; 1/4HP-250 VAC
1/2A-125 VDC; 1/4A-250 VDC

SCALE—FULL

DO NOT SCALE PRINT

UNLESS OTHERWISE SPECIFIED
DIMENSIONS ARE IN INCHES

TOLERANCES ARE:

ONE PLACE	(.0)	±.030
TWO PLACE	(.00)	±.015
THREE PLACE	(.000)	±.005
ANGLES		±

WEIGHT .58 LB.

BZV6-2RQ8

REPLACES

RELEASE NO. SR 7397

DRAWING NUMBER M

ISSUE X X X

CHECK E L 27 MAR. 58

CHECK J W M 29 MAR. 58

CHECK K F M 29 MAR. 58

CHECK

DRAWN K. A. F. 26 MARCH 58

REVISIONS

A	CO 17653	J P H 29 JAN 64
B	C030398	D B W 12 APR 2
C	C053191-B	J A P 2 MAR 84
D	C055989	J A P 6 NOV 84
E	C054958N	K E W 8 JUL 85
F	C072661	D A W 10 SEP 92

FO-50378