OMRON

G9KA

PCB Power Relays

High Power and Temperature Type Power Relay with 800 VAC 260 A / 1,000 VAC 300 A Breaking and Ultra-Low Contact Resistance



- Ambient temperature 85°C (Up to 105°C under specific conditions)
- High impulse withstand voltage, 10 kV
- Contact gap ≥4.0 mm (Conformed to VDE0126)
- Low initial contact resistance ≤0.2 mΩ
- Rises in board temperatures are suppressed by a low heat generation and high dissipation structure.
- Auxiliary contact option (High-capacity model) conformed to mirror contact structure defined in IEC/EN60947-4-1 Annex F7.2
- High Contact Reliability (Min. 5 VDC, 1 mA, reference value) by Bifurcated contacts

As this relay is a high-voltage and high-current type, be sure to refer to the Precautions on page 7 before use.

G9KA

Model Number Legend

G9KA-□□-□
1 2 3

1. Main Contact Form
   1A: 1a contact
2. Auxiliary Contact Form
   None: No Auxiliary contact
   1B: 1b contact
3. Special specification
   None: Standard model
   E: High-capacity model

Application Examples

- Power conditioner inverter
- EV Charger
- Industrial inverter
- UPS

Ordering Information

Classification	Contact form	Enclosure rating	Terminal Shape	Model	Rated coil voltage (V)	Minimum packing unit
Standard model	SPST-NO (1a)	Flux protection	PCB terminals	G9KA-1A	12 VDC 24 VDC	36pcs/box
High-capacity model				G9KA-1A-E		
	SPST-NO + SPST-NC (1a1b)			G9KA-1A1B-E		

Note. When ordering, add the rated coil voltage to the model number.

Example: G9KA-1A DC12
└ Rated coil voltage

Both the coil voltage on the product case and the packing will be marked as □□VDC.

Ratings

● Coil

Rated coil voltage (V)	Rated voltage	Rated current (mA)	Coil resistance (Ω)	Must operate voltage (V)	Must release voltage (V)	Max. voltage (V)	Power consumption (mW)
				% of rated voltage			
G9KA-1A G9KA-1A-E	12 VDC	Approx. 417	28.8	75% max.	5 to 35%	120% (at 23°C)	Approx. 5,000 Approx. 1,012 *
	24 VDC	Approx. 208	115.2				
G9KA-1A1B-E	12 VDC	Approx. 500	24		5% min.	110% (at 23°C)	Approx. 6,000 Approx. 1,215 *
	24 VDC	Approx. 250	96				

Note 1. The rated current and resistance are measured at a coil temperature of 23°C with a tolerance of ±10%.
Note 2. The operating characteristics are measured at a coil temperature of 23°C.
Note 3. The maximum permissible voltage is the maximum value of the fluctuation range for the relay coil operating power supply and was measured at an ambient temperature of 23°C.
Note 4. Use this relay with coil voltage reduction.
* Power consumption with Holding Voltage at 45%. Please confirm the details on page 7, under ●Coil Voltage Reduction (holding voltage) after Relay Operation.

● Contacts

Item		Standard model	High-capacity model	
		G9KA-1A	G9KA-1A-E	G9KA-1A1B-E
Contact type	Main contact	Double break		
	Auxiliary contact	—	—	Bifurcated crossbar
Contact material	Main contact	Ag Alloy		
	Auxiliary contact	—	—	Ag + AU Alloy
Rated load (resistive load)	Main contact	800 VAC making 50 A, carrying 260 A, breaking 50 A/ 800 VAC making 150 A, carrying 260 A, breaking 260 A/60 VDC 200 A (at 85°C) 800 VAC making 50 A, carrying 180 A, breaking 50 A (at 105°C)	1,000 VAC making 50 A, carrying 300 A, breaking 50 A/ 1,000 VAC making 150 A, carrying 300 A, breaking 300 A (at 85°C) 1,000 VAC making 50 A, carrying 250 A, breaking 50 A (at 105°C)	
	Auxiliary contact	—	—	1 A at 30 VDC
Rated carry current	Main contact	260 A (at 85°C),180 A (at 105°C)	300 A (at 85°C),250A (at 105°C)	
	Auxiliary contact	—	—	1A
Max. switching voltage	Main contact	800 VAC, 60 VDC	1,000 VAC	
	Auxiliary contact	—	—	30 VDC
Max. switching current	Main contact	260 A	300 A	
	Auxiliary contact	—	—	1A

Characteristics

Item	model	Standard model	High-capacity model	
		G9KA-1A	G9KA-1A-E	G9KA-1A1B-E
Contact resistance *1		0.2 mΩ max.		Main contact: 0.2 mΩ max. Auxiliary contact:100 mΩ max.
Operate time *2		30 ms max.		
Release time *2		10 ms max.		20 ms max.
Insulation resistance *3		1,000 MΩ min.		
Dielectric strength	Between coil and contacts	5,000 VAC, 50/60 Hz for 1 min		Main contact: 5,000 VAC, 50/60 Hz for 1 min Auxiliary contact: 500 VAC, 50/60 Hz for 1 min
	Between contacts of the same polarity	2,000 VAC, 50/60 Hz for 1 min		Main contact: 2,000 VAC, 50/60 Hz for 1 min Auxiliary contact: 400 VAC, 50/60 Hz for 1 min
	Between contacts of different polarity	—		Between main contact and auxiliary contact: 5,000 VAC, 50/60 Hz for 1 min
Impulse withstand voltage	Between coil and contacts	10 kV (1.2 × 50 μs)		Main contact: 10 kV (1.2 × 50 μs) Auxiliary contact: 0.8 kV (1.2 × 50 μs)
Vibration resistance	Destruction	10 to 55 to 10 Hz, 0.5 mm single amplitude (1.0 mm double amplitude)		
	Malfunction	Excitation: 10 to 55 to 10 Hz, 0.5 mm single amplitude (1.0 mm double amplitude)		Excitation: 10 to 55 to 10 Hz, 0.5 mm single amplitude (1.0 mm double amplitude) No Excitation: 10 to 55 to 10 Hz, 0.15 mm single amplitude (0.3 mm double amplitude)
Shock resistance	Destruction	1,000 m/s²		
	Malfunction	Excitation: 100 m/s²		100 m/s² *7
Durability	Mechanical	100,000 operations min. (at 7,200 operations/h)		
	Electrical (Resistive) *4	800 VAC making 50 A, carrying 260 A, breaking 50 A at 85°C; 30,000 operations min. 800 VAC making 150 A, carrying 260 A, breaking 260 A at 85°C; 10 operations min. 60 VDC 200 A at 85°C; 2,000 operations min. 800 VAC making 50 A, carrying 180 A, breaking 50 A at 105°C; 30,000 operations min. (Switching frequency: 1 second ON - 9 seconds OFF)	1,000 VAC making 50 A, carrying 300 A, breaking 50 A at 85°C; 30,000 operations min. 1,000 VAC making 150 A, carrying 300 A, breaking 300 A at 85°C; 10 operations min. 1,000 VAC making 50 A, carrying 250 A, breaking 50 A at 105°C; 30,000 operations min. (Switching frequency: 1 second ON - 9 seconds OFF)	Main contact: 1,000 VAC making 50 A, carrying 300 A, breaking 50 A at 85°C; 30,000 operations min. 1,000 VAC making 150 A, carrying 300 A, breaking 300 A at 85°C; 10 operations min. 1,000 VAC making 50 A, carrying 250 A, breaking 50 A at 105°C; 30,000 operations min. Auxiliary contact: 1 A 30 VDC at 105°C; 100,000 operations min. (Switching frequency: 1 second ON - 9 seconds OFF)
Failure rate (M level) (Reference value) *5		1 A at 5 VDC		Main contact: 1 A at 5 VDC Auxiliary contact: 1 mA at 5 VDC
Use conditions	Coil holding voltage *6	45% to 60% (at 85°C), 50% to 55% (at 105°C) of rated coil voltage		
	Ambient operating temperature	-40°C to +105°C (with no icing or condensation)		
	Ambient operating humidity	5% to 85%		
Weight		Approx. 220 g	Approx. 235 g	Approx. 240 g

Note. The values given above are initial values at 23°C. (Except Electrical Durability)

*1. Measurement conditions: Main contact 200 A at 6 VDC (after 30 minutes) using the voltage drop method. Auxiliary contact 1 A at 5 VDC using the voltage drop method.
*2. Measurement conditions: Applied rated coil voltage, no contact bouncing.
*3. Measurement conditions: Measured with a 1,000 VDC megohmmeter at the same point as the dielectric strength was measured.
*4. This specification is when diode and zener diode are used. For relay coil, please connect diode and zener diode. For more detail, please refer to ●Diode Connection for Operating Coil on page 7.
*5. The value was measured at a switching frequency of 180 operations/ minute (60 operations/ minute for G9KA-1A1B-E).
*6. For the detail regarding holding voltage usage, please refer to ●Coil Voltage Reduction (holding voltage) after Relay Operation on page 7.
*7. No excitation, shock in the Y+ direction excluded. No excitation, standard value in the Y+ direction is 25 m/s².

Engineering Data

● Contact resistance

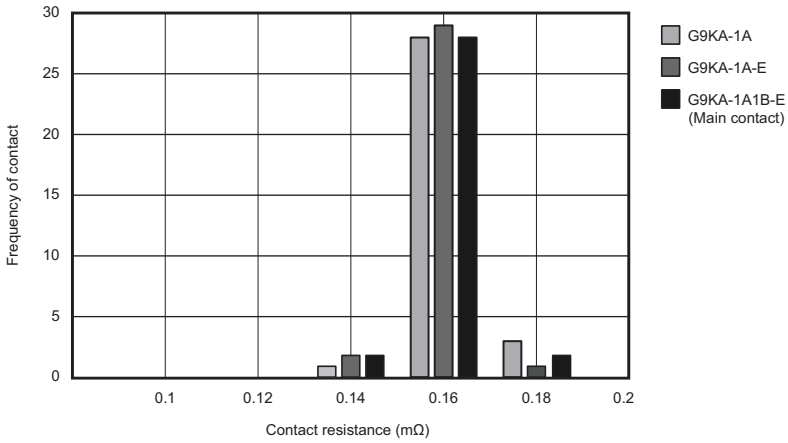

● Malfunction shock resistance

G9KA-1A
G9KA-1A-E

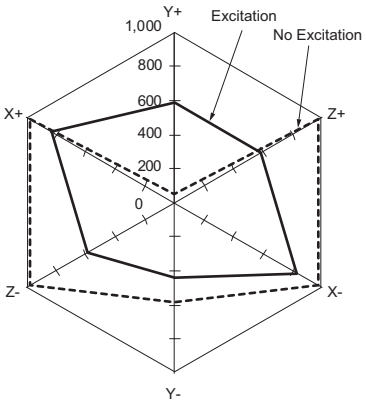

Measurement:
Measure the value of contact malfunction happening by applying 3 axes with 6 direction 3 times each.
The energized voltage is within the range of the rated holding voltage.

Standard value:
Excitation 100 m/s²

Shock direction

G9KA-1A

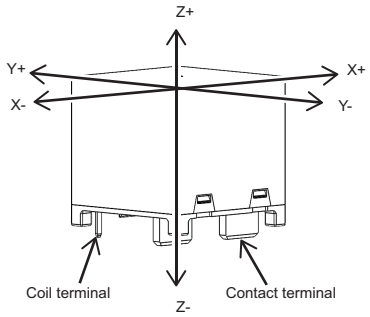

G9KA-1A-E

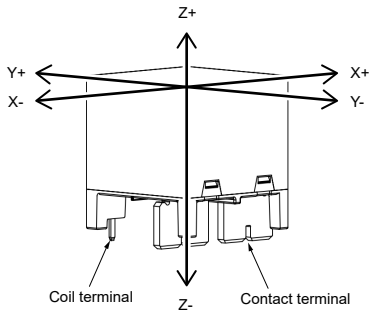

G9KA-1A1B-E

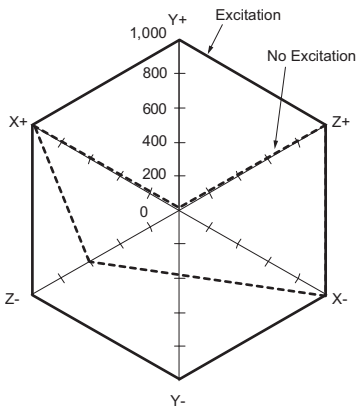

Measurement:
Measure the shock value of contact malfunction happening by applying 3 axes with 6 directions, 3 times each.
The energized voltage is within the range of the rated holding voltage.

Standard value:
100 m/s² (No excitation, in the Y+ direction excluded)
No excitation, in the Y+ direction: 25 m/s²

Shock direction

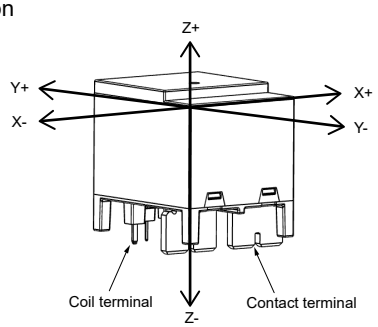

Dimensions

CAD Data marked products, 2D drawings and 3D CAD models are available.
For CAD information, please visit our website, which is noted on the last page.

(Unit:mm)

G9KA-1A

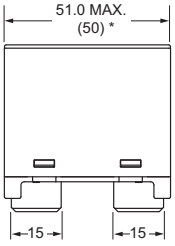

*Average value

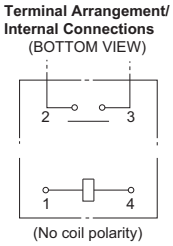

(No coil polarity)

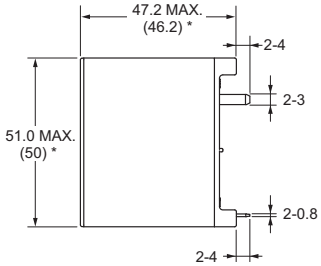

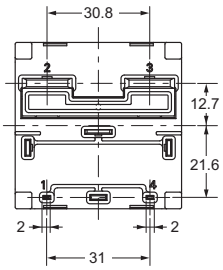

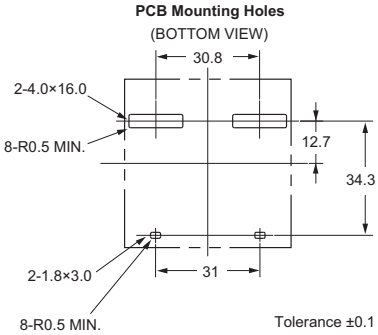

CAD Data

G9KA-1A-E

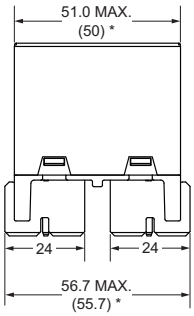

* Average value

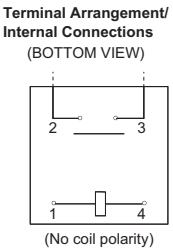

(No coil polarity)

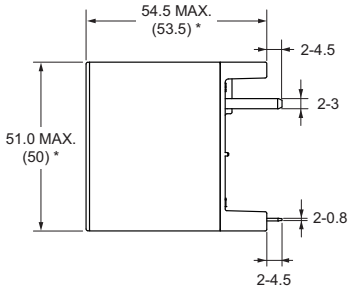

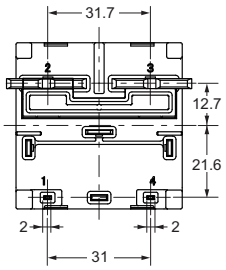

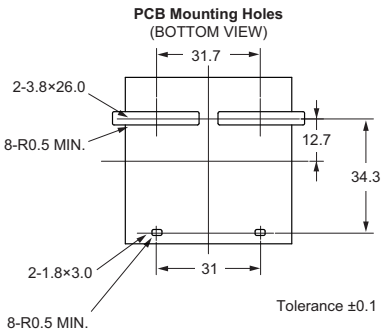

CAD Data

G9KA-1A1B-E

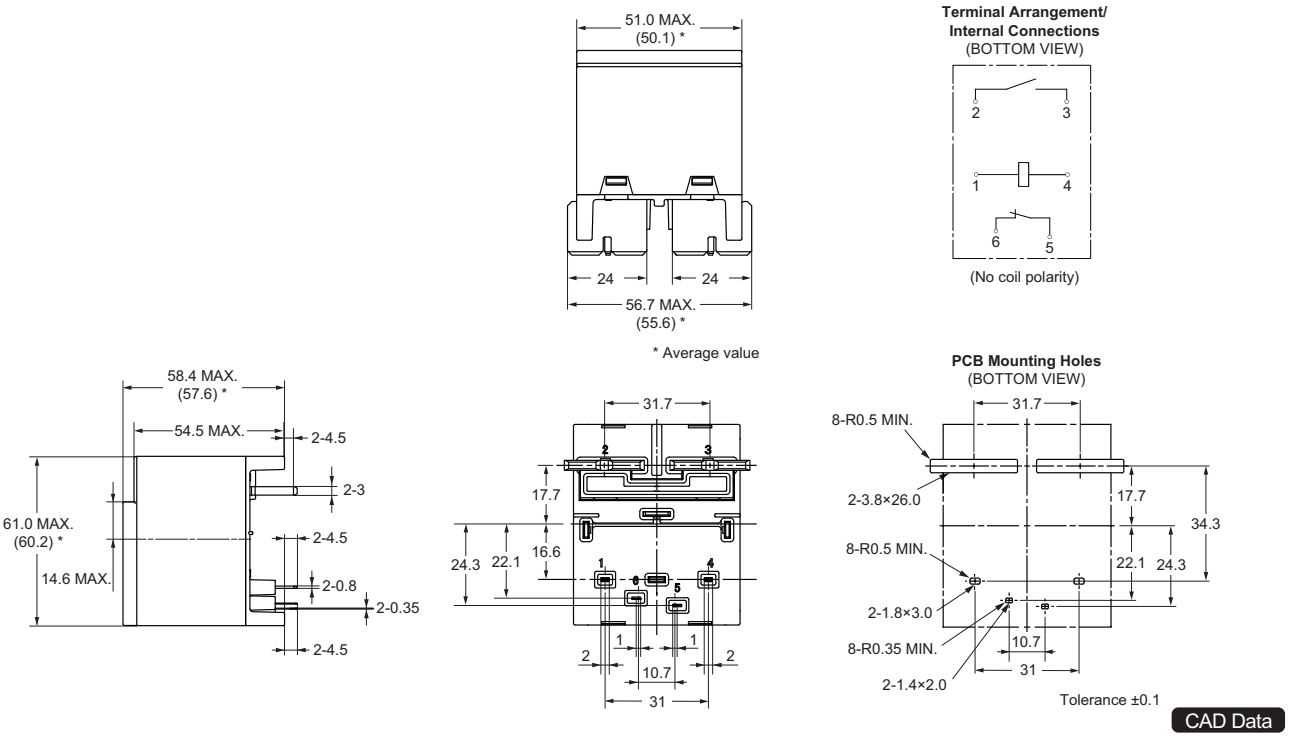

CAD Data

Approval Standard

The approval rating values for overseas standards are different from the performance values determined individually confirm the values before use.

UL/C-UL Recognized: (File No. E41515)

Model	Contact form	Coil ratings	Contact ratings	Number of test operations
G9KA-1A	SPST-NO (1a)	12 to 24 VDC	800 VAC 50 A (Resistive) at 85°C	30,000
			800 VAC making 50 A, carrying 260 A, breaking 50 A at 85°C	30,000
			60 VDC 200 A (Resistive) at 85°C	2,000
G9KA-1A-E	SPST-NO (1a)	12 to 24 VDC	1,000 VAC making 50 A, carrying 300 A, breaking 50 A at 85°C	30,000
			1,000 VAC making 150 A, carrying 300 A, breaking 300 A at 85°C	10
			50 VDC 300 A (Resistive) at 85°C	2,000
G9KA-1A1B-E	SPST-NO (1a)	12 to 24 VDC	1,000 VAC making 50 A, carrying 300 A, breaking 50 A (Resistive) (N.O.) at 85°C	30,000
			1,000 VAC making 150 A, carrying 300 A, breaking 300 A (Resistive) (N.O.) at 85°C	10
	SPST-NC (1b)		30 VDC 1 A (Resistive) (N.C.) at 85°C	100,000

EN/IEC, TÜV Certificated:

Model	Contact form	Coil ratings	Contact ratings	Number of test operations	Certificate No.
G9KA-1A	SPST-NO (1a)	12, 24 VDC	800 VAC making 50 A, carrying 260 A, breaking 50 A at 85°C	30,000	R50459726
G9KA-1A-E	SPST-NO (1a)	12, 24 VDC	1,000 VAC making 50 A, carrying 300 A, breaking 50 A at 85°C	30,000	
			1,000 VAC making 150 A, carrying 300 A, breaking 300 A at 85°C	10	
G9KA-1A1B-E	SPST-NO (1a)	12, 24 VDC	1,000 VAC making 50 A, carrying 300 A, breaking 50 A (Resistive) (N.O.) at 85°C	30,000	R50675502
			1,000 VAC making 150 A, carrying 300 A, breaking 300 A (Resistive) (N.O.) at 85°C	10	
	SPST-NC (1b)		30 VDC 1 A (Resistive) (N.C.) at 85°C	100,000	

CQC Certificated:

Model	Contact form	Coil ratings	Contact ratings	Number of test operations	Certificate No.
G9KA-1A	SPST-NO (1a)	12, 24 VDC	800 VAC making 50 A, carrying 260 A, breaking 50 A at 85°C	30,000	CQC20002275617
G9KA-1A-E	SPST-NO (1a)	12, 24 VDC	1,000 VAC making 50 A, carrying 300 A, breaking 50 A at 85°C	30,000	
			1,000 VAC making 150 A, carrying 300 A, breaking 300 A at 85°C	10	
G9KA-1A1B-E	SPST-NO (1a)	12, 24 VDC	1,000 VAC making 50 A, carrying 300 A, breaking 50 A (Resistive) (N.O.) at 85°C	30,000	CQC25002471904
			1,000 VAC making 150 A, carrying 300 A, breaking 300 A (Resistive) (N.O.) at 85°C	10	
	SPST-NC (1b)		30 VDC 1 A (Resistive) (N.C.) at 85°C	100,000	

G9KA-1A

Insulation data		
Creepage distance - between coil and contact		12.5 mm min.
Clearance - between coil and contact		10.32 mm min.
Type of insulation - between coil and contact		Basic insulation
Type of interruption		Micro disconnection
Conditions of insulation data		
Material group of insulation		IIIa
Pollution degree (external environment of the relay)		3
Rated insulation voltage		800 V
Overvoltage category	Altitude up to 2,000 m	III
	Altitude up to 4,000 m	III
Other data		
Category of protection (IEC61810-1)		RTII
Flammability class (UL94)		V-0
Coil insulation system (UL1446)		Class F

G9KA-1A(1B)-E

Insulation data		
Creepage distance - between coil and main contact		16 mm min. *1
- between main contact and auxiliary contact		16 mm min.
Clearance - between coil and main contact		10.32 mm min.
- between main contact and auxiliary contact		10.32 mm min.
Type of insulation - between coil and main contact		Basic insulation
- between main contact and auxiliary contact		Basic insulation
- between coil and auxiliary contact		Functional insulation
Type of interruption		Micro disconnection
Conditions of insulation data		
Material group of insulation		IIIa
Pollution degree (external environment of the relay)		3
Rated insulation voltage	Main contact	1,000 V
	auxiliary contact	277 V
Overvoltage category	Altitude up to 2,000 m	III
	Altitude up to 4,000 m	III
Other data		
Category of protection (IEC61810-1)		RTII
Flammability class (UL94)		V-0
Coil insulation system (UL1446)		Class F

*1. Recertification applies to products manufactured from July 1, 2025.
The production date can be confirmed by the Lot No.

<Lot No. Naming Rules>

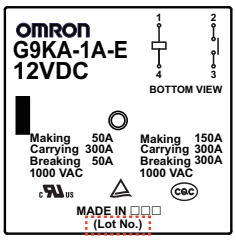

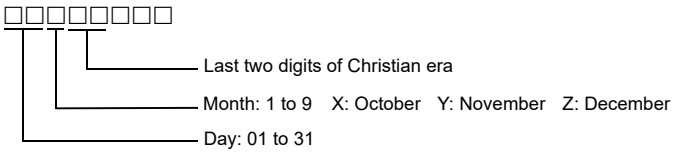

Precautions

● Refer to *PCB Relays Common Precautions* for general precautions.

⚠Warning

As this relay is a high-voltage and high-current type, there is a risk of abnormal heat generation, smoke generation or fire if you use the relay with a contact voltage, current, or for a number of times beyond the specified range. Use only within the specified ranges.



If the power is switched on when the connections are insufficient, there is a risk of abnormal heat generation. Do not connect and use clips and sockets on individual relays.



If the power is switched on when the connections are insufficient, there is a risk of abnormal heat generation. Please install and use relays under recommended conditions.



Precautions for Safe Use

●Drop

- Do not use relays that have been dropped as they may not function properly.

Precautions for Correct Use

●Coil Voltage Reduction (holding voltage) after Relay Operation

- Use this relay with coil voltage reduction.
- Use the relay in the applied voltage and time ranges indicated in the figure and table below.
- Configure the settings so as not to exceed these ranges due to the change of coil voltage difference.

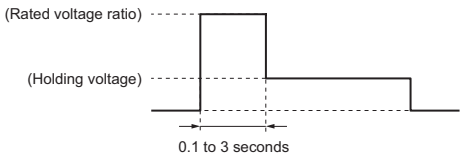

	Ambient temperature 85°C max.	Ambient temperature 85 to 105°C
Rated voltage ratio	100 to 120%	120 to 140%
Holding voltage	45 to 60%	50 to 55%

●Diode Connection for Operating Coil

- Connect diode and zener diode (or varistor) to the coil (refer to the picture below).
  Diode is for coil surge absorption. Ensure to include zener diode as there is a possibility of any influence for switching capability when only using diodes.
- Coil has no polarity. Connect the diodes in the reverse polarity of the voltage applied to the coil.
- The recommended zener diode voltage is 2 times that of the rated coil voltage.
- Use diodes with reverse dielectric strength 10 times or more that of coil rated voltage, and with forward current more than coil rated current.

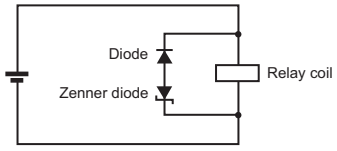

●PCB Terminal Soldering

- Perform soldering under the following conditions.
  G9KA-1A: Preheat at 120°C for 60 seconds and dip in solder bath at 290°C for up to 20 seconds.
  G9KA-1A-E, G9KA-1A1B-E: Preheat at 120°C for 300 seconds and dip in a solder bath at 290°C for up to 30 seconds.
- It is not possible to wash relay as this is not fully sealed type.

●Assembly

- Assemble relays in an environment with less amount of dust and harmful gases.
- Using the relay under high temperature, high humidity, or harmful gas may deteriorate its performance characteristics due to condensation or corrosive materials, resulting in failure or burn damage to the relay.
- This product weight is about 220 to 240 g. Be careful of the strength of PCB. To reduce soldering crack due to heat stress, use both sides through hole PCB.

●Electrical Endurance

- This relay's electrical endurance specification is based on our company's standard test procedure with resistive loads. Relays intended for use with remove; types of drive circuits PWM, capacitive, resistive dropper etc.), types of loads (e.g. capacitive or inductive), and switching cycles (duty and operation timing) must be tested to confirm suitability to the actual intended application.
- The final failure mode is failure to break the circuit. In such a case, burning may extend to surrounding components. Implement safety circuits and other measures to minimize the risk of mechanical failure.

●Micro Load

- This is a power relay for high power switching. Do not use for micro loads such as signal switching.

Please check each region's Terms & Conditions by region website.

OMRON Corporation
Device & Module Solutions Company

Regional Contact

Americas
https://components.omron.com/us

Europe
https://components.omron.com/eu

Asia-Pacific
https://components.omron.com/ap

China
https://components.omron.com.cn

Korea
https://components.omron.com/kr

Japan
https://components.omron.com/jp

© OMRON Corporation 2021-2026 All Rights Reserved.
In the interest of product improvement, specifications are subject to change without notice.

Cat. No. K335-E1-16
0926 (0221)