Part Number: XSM2ACR93W

SnapLED

Features

- High current operation for greater luminous output
- Rivet design allows for solderless mounting
- Low power consumption and thermal resistance
- Can be used with automatic insertion equipment
- RoHS compliant.

Benefits:

- Rugged design allows for easy maintenance
- Robust package for optimum reliability

Typical Applications:

- Automotive side markers
- Gaming and entertainment lighting
- Signs and road hazard indicators

Package Schematics

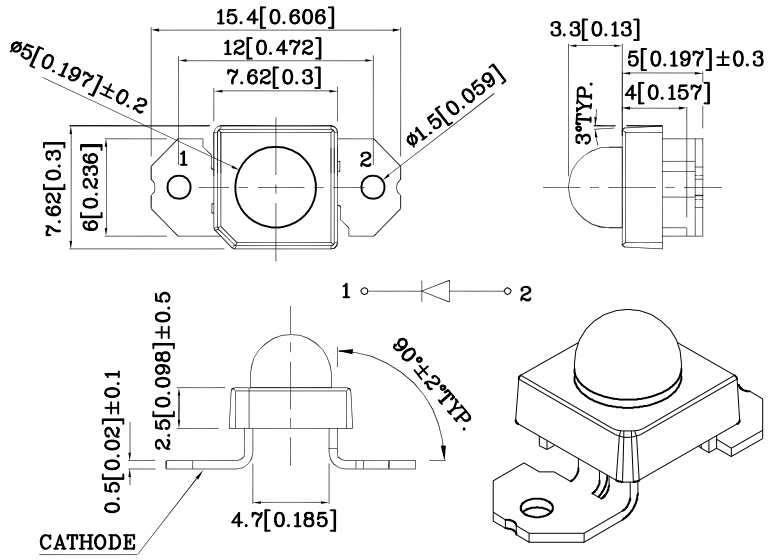

Notes:
1. All dimensions are in millimeters (inches).
2. Tolerance is ±0.25(0.01") unless otherwise noted.
3. Specifications are subject to change without notice.

Absolute Maximum Ratings (T_A=25°C)		M2ACR (AlGaInP)	Unit
Reverse Voltage	V_R	5	V
DC Forward Current	I_F	70	mA
Power Dissipation	P_D	210	mW
Operating Temperature	T_A	-40 ~ +85	°C
Storage Temperature	Tstg	-55 ~ +85	
Lead Solder Temperature [1.5mm(0.06inch)Below Seating Plane.[1]		260°C For 5 Seconds	

Operating Characteristics (T_A=25°C)		M2ACR (AlGaInP)	Unit
Forward Voltage (Min.) (I_F=70mA)	V_F	2.2	V
Forward Voltage (Typ.) (I_F=70mA)	V_F	2.4	V
Forward Voltage (Max.) (I_F=70mA)	V_F	3.0	V
Reverse Current (Max.) (V_R=5V)	I_R	10	uA
Wavelength of Peak Emission (Typ.) (I_F=70mA)	λP	640	nm
Wavelength of Dominant Emission (Typ.) (I_F=70mA)	λD	625	nm
Spectral Line Full Width At Half Maximum (Typ.) (I_F=70mA)	△λ	25	nm
Capacitance (Typ.) (V_F=0V, f=1MHz)	C	27	pF
Thermal Resistance (Typ.)	Rθj-pin	125	°C/W

Part Number	Emitting Color	Emitting Material	Lens-color	Luminous Intensity (IF=70mA) cd		Luminous Flux (IF=70mA) lm	Viewing Angle 2θ 1/2
				min.	typ.	typ.	
XSM2ACR93W	Red	AlGaInP	Water Clear	9	17.99	5.3	30°

1.Luminous intensity is measured with an integrating sphere after the device has stabilized.
2.θ 1/2 is the angle from optical centerline where the luminous intensity is 1/2 of the optical peak value.

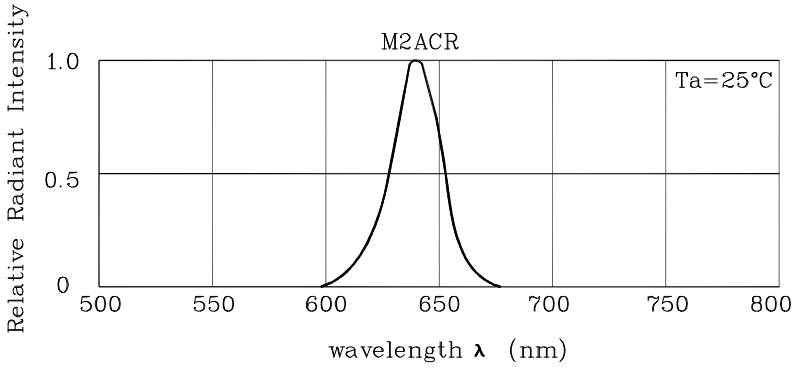

RELATIVE INTENSITY Vs. WAVELENGTH

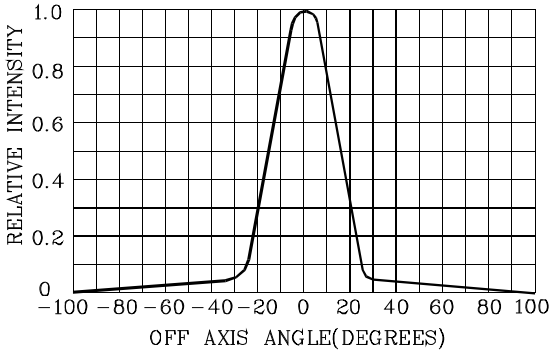

RELATIVE INTENSITY VS OFF AXIS ANGLE

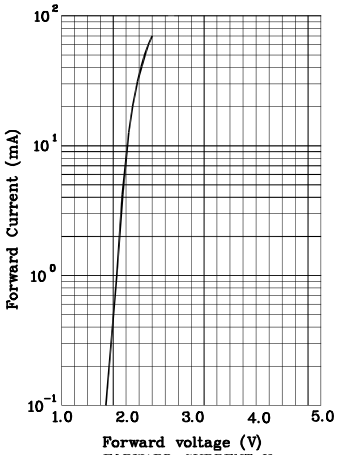

FORWARD CURRENT Vs.
FORWARD VOLTAGE

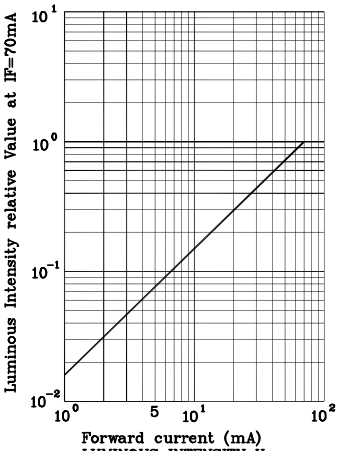

LUMINOUS INTENSITY Vs.
FORWARD CURRENT

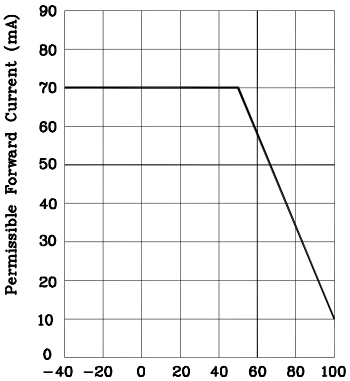

FORWARD CURRENT
DERATING CURVE

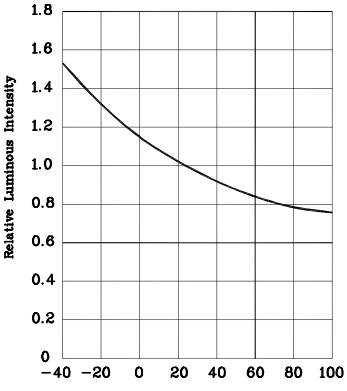

LUMINOUS INTENSITY VS.
AMBIENT TEMPERATURE

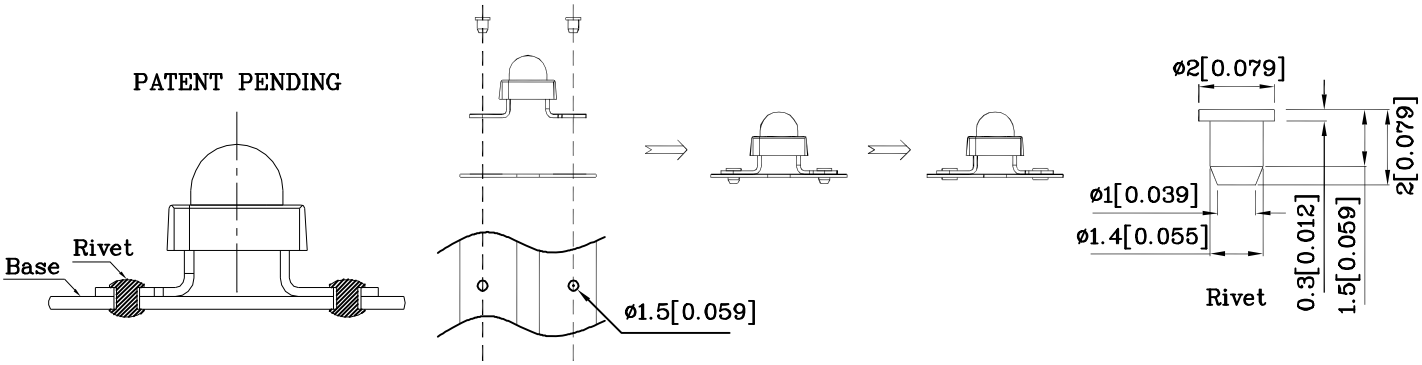

Wave Soldering Profile for Thru-Hole Products (Pb-Free Components)

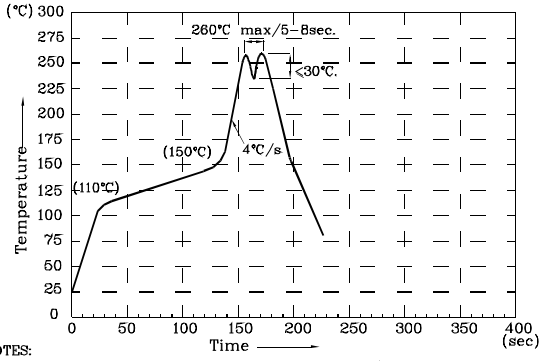

NOTES:

1. Recommend the wave temperature 245℃~260℃. The maximum soldering temperature should be less than 260℃.
2. Do not apply stress on epoxy resins when temperature is over 85℃.
3. The soldering profile apply to the lead free soldering (Sn/Cu/Ag alloy).
4. During wave soldering, the PCB top-surface temperature should be kept below 105℃.
5. No more than once.

Remarks:

If special sorting is required (e.g. binning based on forward voltage, luminous intensity / luminous flux, or wavelength),
the typical accuracy of the sorting process is as follows:

1. Wavelength: +/-1nm
2. Luminous Intensity / Luminous Flux: +/-15%
3. Forward Voltage: +/-0.1V

Note: Accuracy may depend on the sorting parameters.

PACKING & LABEL SPECIFICATIONS