ADAM TECH

MODULAR & MAGNETIC JACKS

MOST POPULAR CONFIGURATIONS

Modular & Magnetic Jacks

Adam Tech's MTJ Series is a complete line of PCB Modular Jacks, which are UL and CSA approved and meet all required FCC rules and regulations. This product line is composed of Single, Dual, and Quad Port configurations available in a multitude of sizes (4P2C through 10P10C), with options for stacked, integrated magnetics, metal shielding, panel grounds, and LED's. Hybrid combinations with USB are also available.

Adam Tech's integrated magnetics (transformers) are designed to support 10/100, 100, 1G, 2.5G, 10G, 25G, and 40G Base-T applications such as hubs, routers, ADSL modems, and ATM transmission equipment. The integrated magnetics allows the design engineer to save PC board real-estate and lower the total part count per system. This series meets all applicable specifications for CAT 5, 5e, 6, 6a, and 8, supporting speeds of up to 40GBs in performance. They are built to meet Category 5e, 6, or 6a performance according to TIA/EIA 568-C-2. These jacks support all Gigabyte and Ethernet Protocols.

Versions include PoE (Power over Ethernet), metal shielding for EMI protection with ground peg location options, ground fingers, and LED's for link/activity indication and network speed verification. Adam Tech's magnetics configurations and schematics are highly customizable and interchangeable due to our in-house winding design and production. Feel free to inquire as to any specific schematic you require, which may not be included in this brochure.

In general, Adam Tech's Modular Jacks series is highly customizable with high flexibility in tooling new designs or making modifications for a specific style to accommodate applicational requirements.

FEATURES AND BENEFITS:

- **Sizes ranging from 4P2C to 10P10C**
- **Single, Ganged, and Stacked jacks**
- **Integrated magnetics options**
- **Metal shielding options**
- **Variety of LED color options**
- **Panel ground available**
- **Hybrid MTJ/USB jacks**
- **Through hole and surface mount**
- **Speeds up to 40GBs**

APPLICATIONS:

- **Telecommunications**
- **Data networks**
- **Industrial automation**
- **Consumer electronics**

This brochure highlights our popular Modular and Magnetic Jacks. To view our full offering, please click here.

Contact us at info@adam-tech.com for custom solutions.

MTJ-62ATX1-FSD-PG4-HT

RJ25, 6P2C, Single Port, Right Angle, Tab Up, Full Shield, Panel Grounds, Through Hole, High Temp

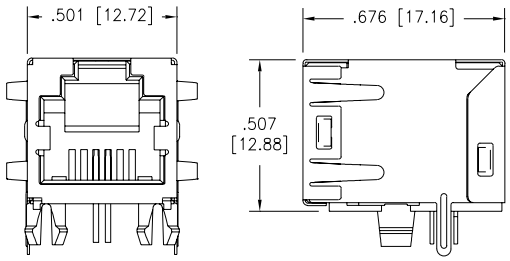

MTJ-88ARX1-106-Y-HT

RJ45, 8P8C, Single Port, Right Angle, Tab Up, Unshielded, Through Hole, High Temp

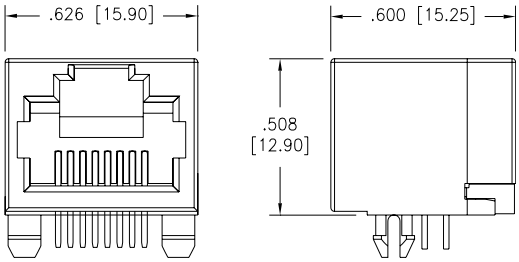

MTJ-88ARX1-FSM-PG-HT-D

RJ45, 8P8C, Single Port, Right Angle, Tab Up, Full Shield, Panel Grounds, Through Hole, High Temp

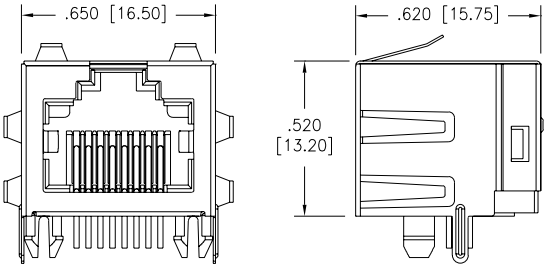

MTJ-88ARX1-FSW-PG-LG-Y

RJ45, 8P8C, Single Port, Right Angle, Tab Up, Full Shield, Panel Grounds, Through Hole, Yellow-Green LED's

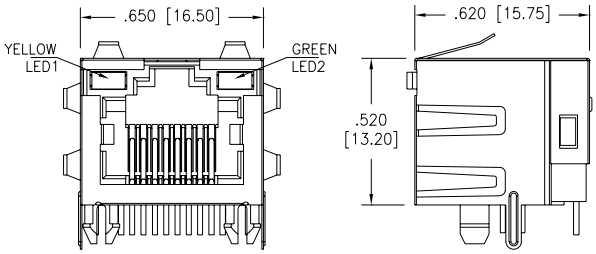

MTJ-88ARX1-LG-Y-HT

RJ45, 8P8C, Single Port, Right Angle, Tab Up, Unshielded, Through Hole, Yellow-Green LED's, High Temp

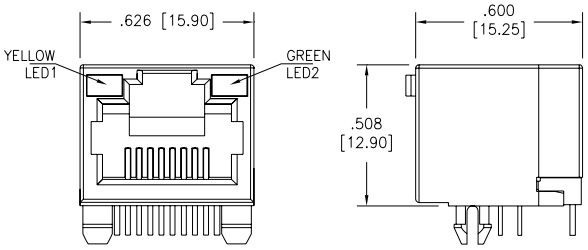

MTJ-88ARX1C-Y-A

RJ45, 8P8C, Single Port, Right Angle, Tab Up, Unshielded, Through Hole

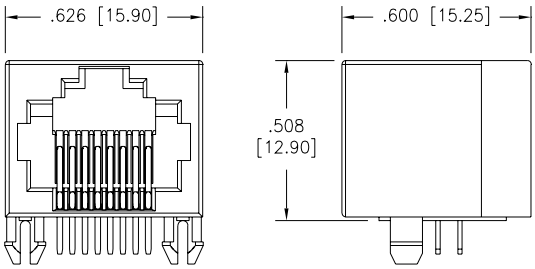

Click product box to view product datasheet at adam-tech.com

MTJ-88AX1-FSN-LH-HT-Y-B

RJ45, 8P8C, Single Port, Vertical, Full Shield, Through Hole, Green-Yellow LED's, High Temp

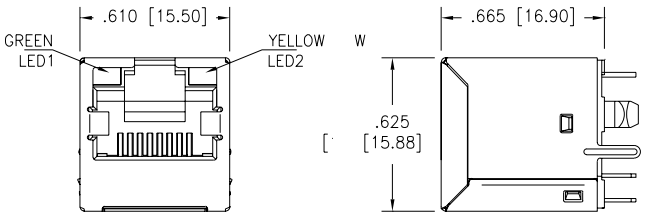

MTJ-88HX1-FS-Y-KT-TR

RJ45, 8P8C, Single Port, Vertical, Full Shield, Surface Mount

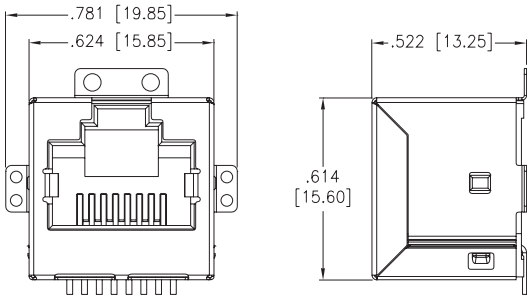

MTJ-88SUX1-FS-PG-HT-WOT-Y

RJ45, 8P8C, Single Port, Right Angle, Tab Up, Full Shield, Panel Grounds, Through Hole, Wide Operating Temperature

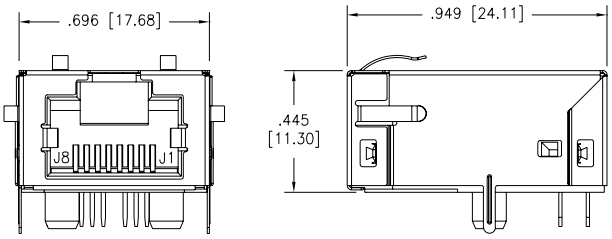

MTJ-88TUX1-FS2-LH-C5E-HT

RJ45, 8P8C, CAT 5e, Single Port, Right Angle, Tab Up, Full Shield, Through Hole, Green-Yellow LED's, High Temp

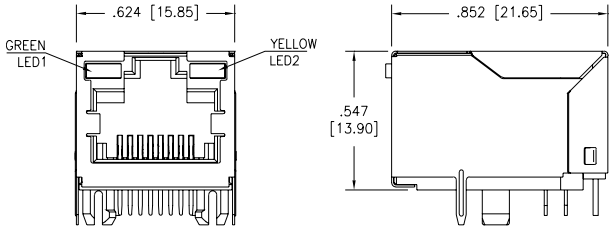

MTJ-88TUX1-FS2-PG2T-L5-C5E-HT

RJ45, 8P8C, CAT 5e, Single Port, Right Angle, Tab Up, Full Shield, Top Panel Grounds, Through Hole, Green-Orange LED's, High Temp

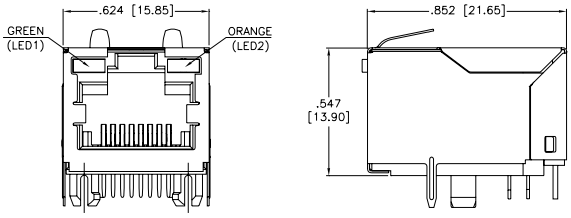

MTJ-88TUX1-FS2-PG2T-L19-C6A-HT

RJ45, 8P8C, CAT 6A, Single Port, Right Angle, Tab Up, Full Shield, Top Panel Grounds, Through Hole, Green-Orange LED's, High Temp

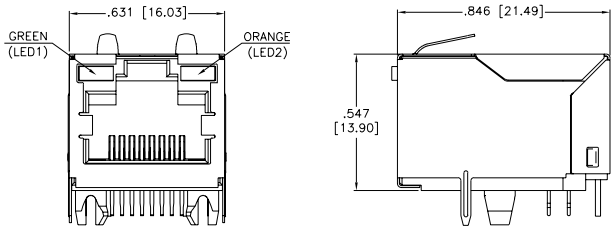

Click product box to view product datasheet at adam-tech.com

MTJG-2-88ARX1-FSW-EMI-Y-HT-HF

RJ45, 8P8C, 2 Port Ganged, Right Angle, Tab Up, Full Shield, Through Hole, High Temp

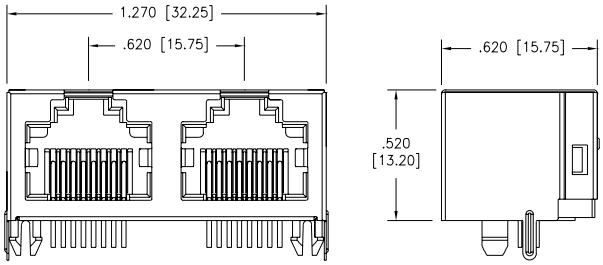

MTJG-2-88JX1-FSG-PG-Y

RJ45, 8P8C, 2 Port Stacked, Right Angle, Tab Up & Down, Full Shield, Side Panel Grounds, Through Hole

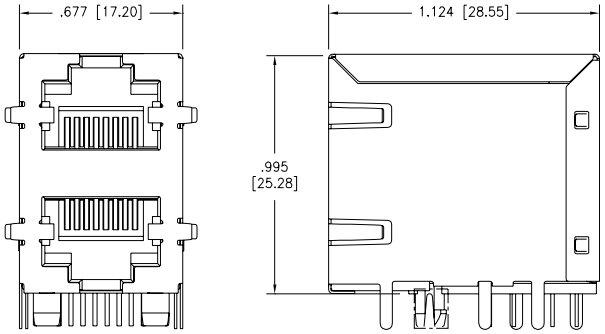

MTJG-2-88JX1-Y

RJ45, 8P8C, 2 Port Stacked, Right Angle, Tab Up & Down, Unshielded, Through Hole

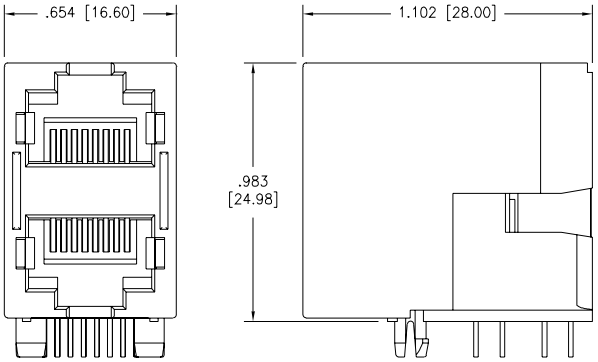

MTJG-4-88JX1-FSH-PG-LH-Y-HT

RJ45, 8P8C, 4 Port Ganged & Stacked, Right Angle, Tab Up & Down, Full Shield, Panel Grounds, Through Hole, Green-Yellow LED's, High Temp

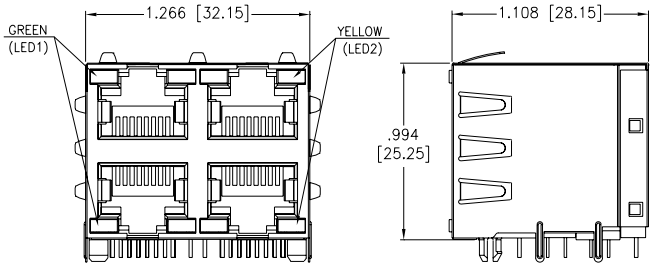

MTJG-4-88TX1-A-HT

RJ45, 8P8C, 4 Port Ganged, Right Angle, Tab Down, Unshielded, Through Hole, High Temp

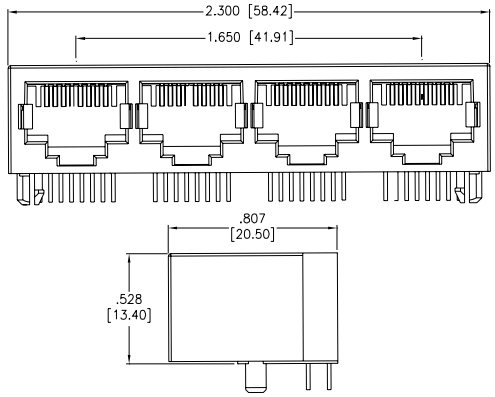

MTJG-8-88JX1-FSH-PG-LH-Y

RJ45, 8P8C, 8 Port Ganged, Right Angle, Tab Up & Down, Full Shield, Panel Grounds, Through Hole, Green-Yellow LED's

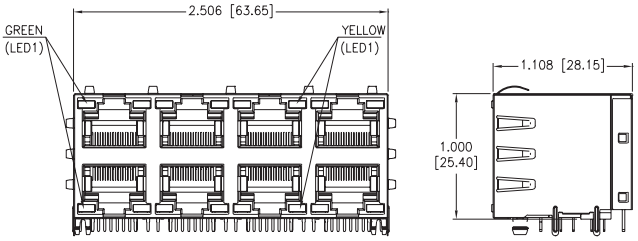

Click product box to view product datasheet at adam-tech.com

MTJ-88AGX1-FS-VLD-M501C-WOT

RJ45, 8P8C, 25G Base-T, Single Port, Right Angle, Tab Down, Full Shield, Through Hole, Integral Magnetics, Green-Green LED's, Wide Operating Temperature

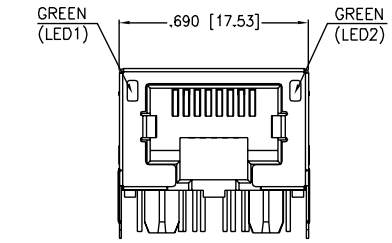

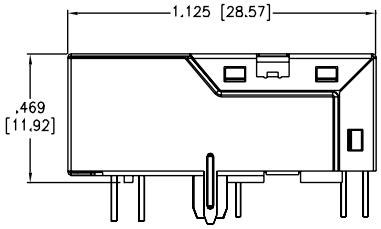

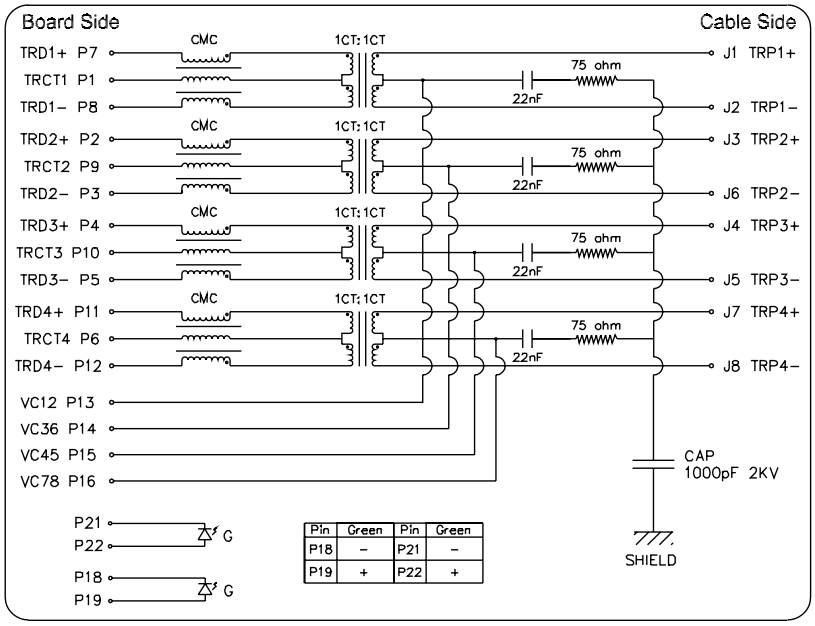

Pin	Green	Pin	Green
P18	–	P21	–
P19	+	P22	+

MTJ-88AX1-FS-TSMT-P-L5-M398CH-WOT-KT

RJ45, 8P8C, 2.5G Base-T, Single Port, Vertical, Full Shield, True Surface Mount, Integral Magnetics, Green-Orange LED's, Wide Operating Temperature

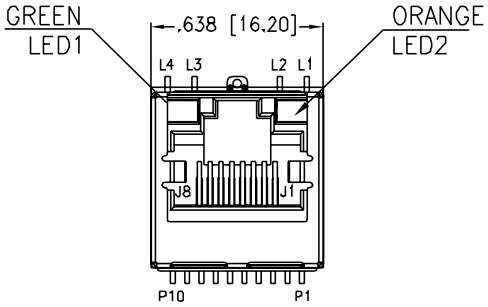

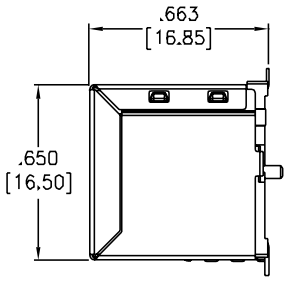

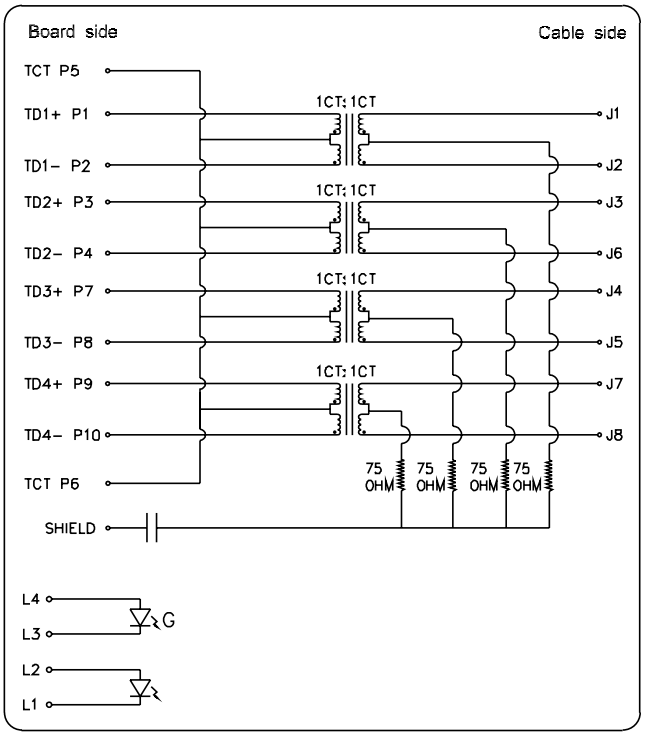

Click product box to view product datasheet at adam-tech.com

MTJ-88AX1-FS-TSMT-P-LH-M463Y-HT-WOT-KT

RJ45, 8P8C, 1G Base-T, Single Port, Vertical, Full Shield, True Surface Mount, Integral Magnetics, Green-Yellow LED's, High Temp, Wide Operating Temperature

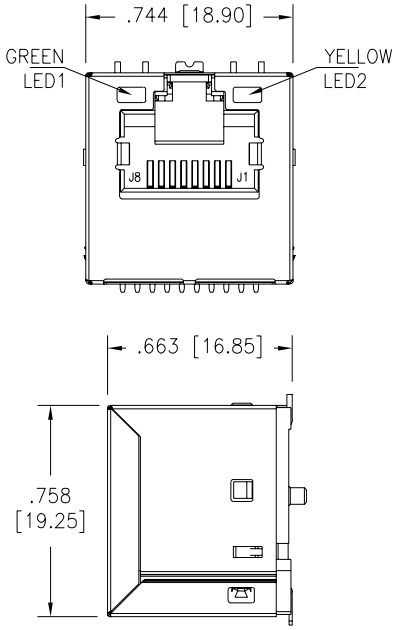

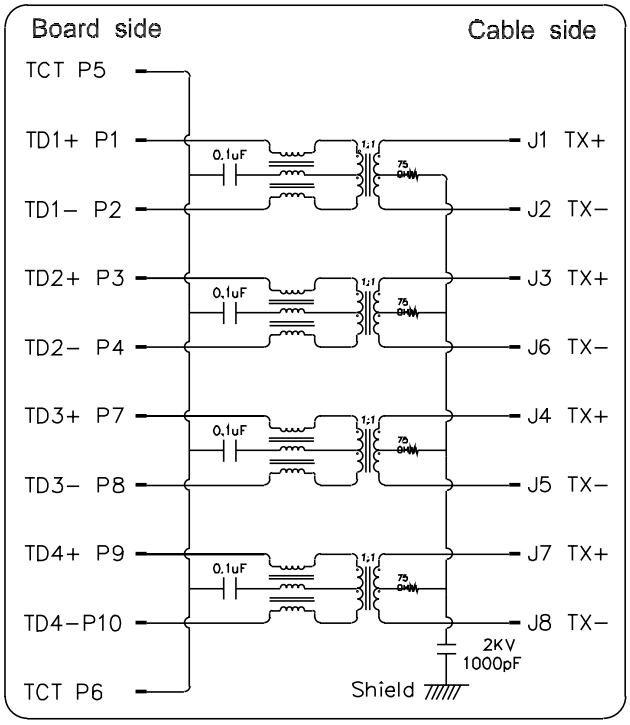

MTJ-88AX1-FSN-STP-LH-M236BC-WOT

RJ45, 8P8C, 25G Base-T, Single Port, Vertical, Full Shield, Star Peg, Through Hole, Integral Magnetics, Green-Yellow LED's, Wide Operating Temperature

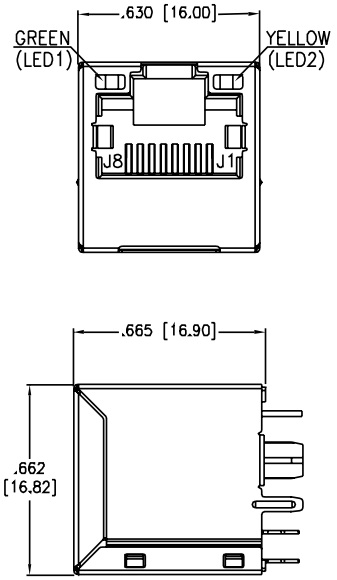

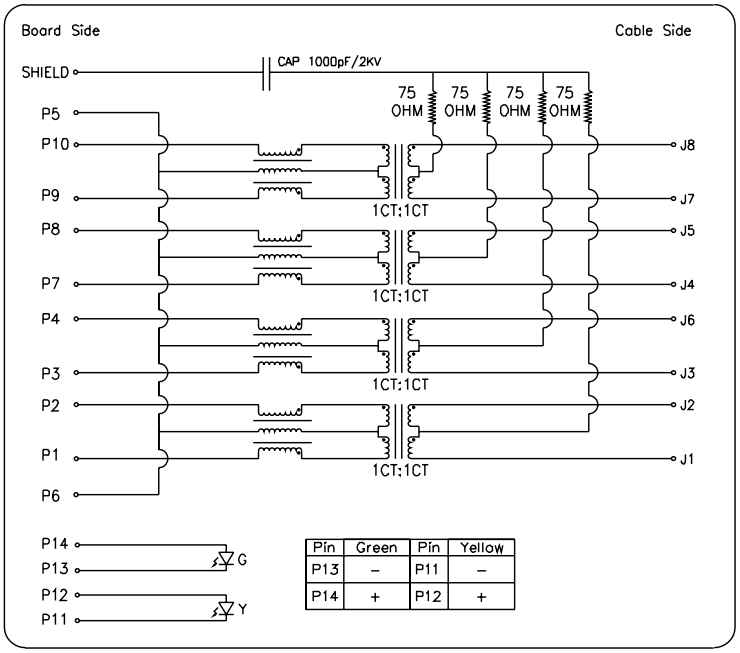

Click product box to view product datasheet at adam-tech.com

MTJ-88BAX1-FS-PG-VL16-M329Y

RJ45, 8P8C, 1G Base-T, Single Port, Right Angle, Mid-Mount, Tab Up, Full Shield, Panel Grounds, Through Hole, Integral Magnetics, Green/Yellow-Green/Yellow LED's

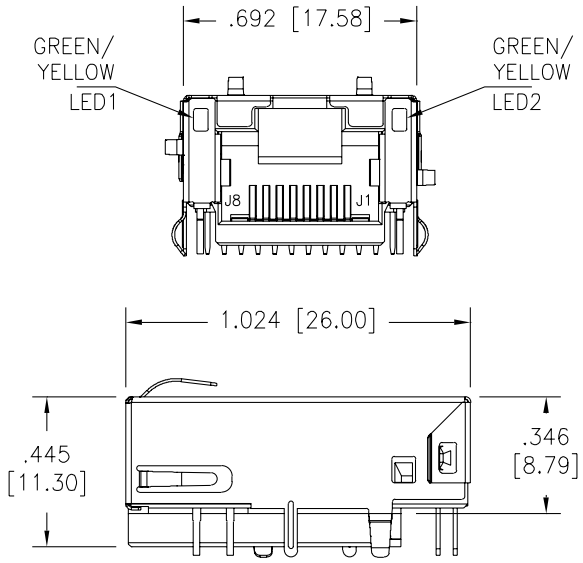

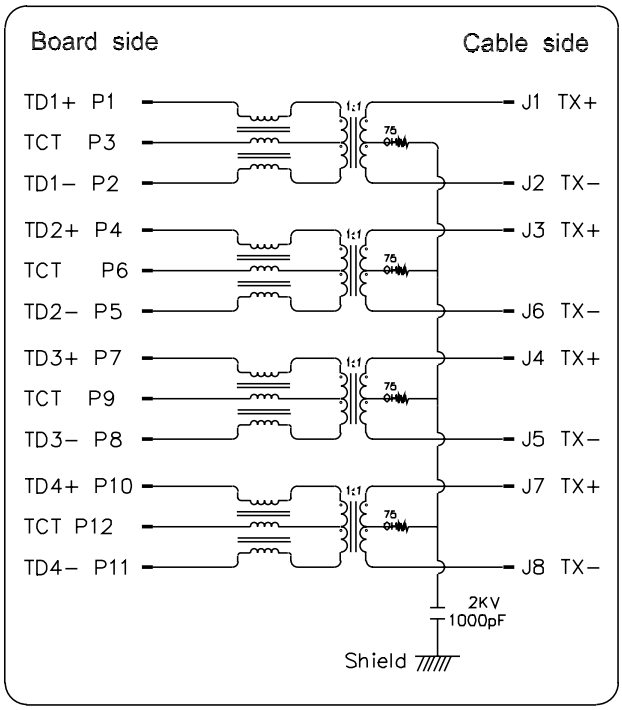

MTJ-88NX1-FS-PG-VLD-M245AC-HT-WOT

RJ45, 8P8C, 25G Base-T, Single Port, Right Angle, Tab Down, Full Shield, Panel Grounds, Through Hole, Integral Magnetics, Green-Green LED's, High Temp, Wide Operating Temperature

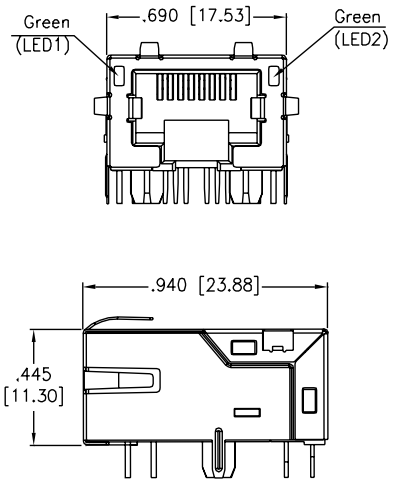

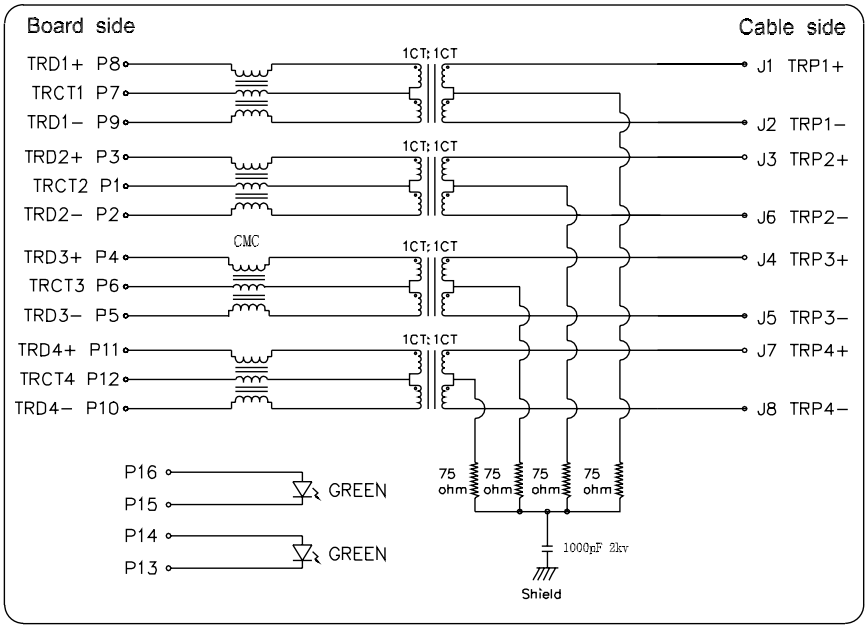

Click product box to view product datasheet at adam-tech.com

MTJ-88NX1-FS-PG-VLD-M245BC-HT-WOT

RJ45, 8P8C, 40G Base-T, Single Port, Right Angle, Tab Down, Full Shield, Panel Grounds, Through Hole, Integral Magnetics, Green-Green LED's, High Temp, Wide Operating Temperature

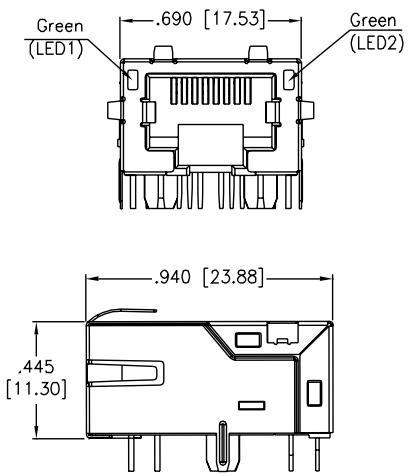

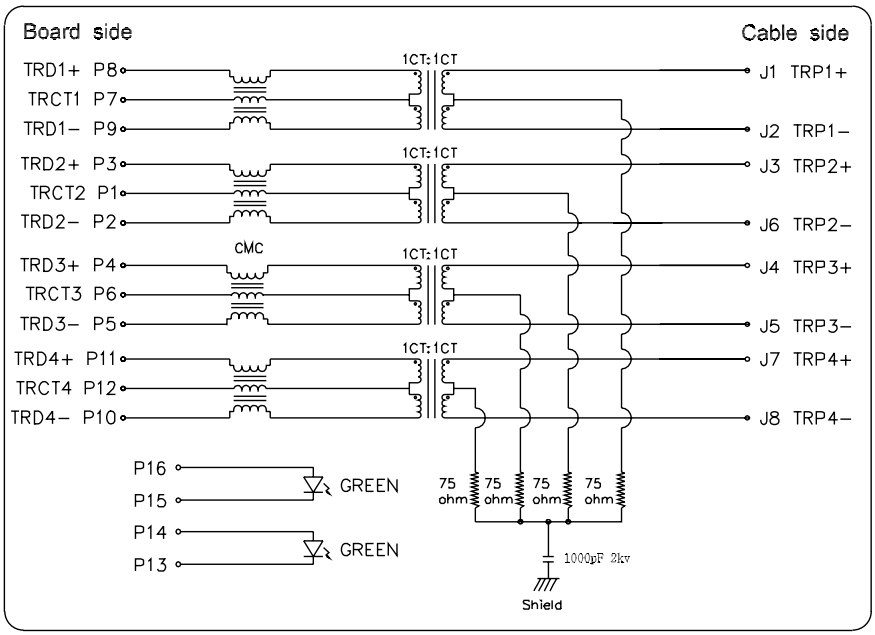

MTJ-88NX1-FS-VLD-M245AC-HT-WOT

RJ45, 8P8C, 25G Base-T, Single Port, Right Angle, Tab Down, Full Shield, Through Hole, Integral Magnetics, Green-Green LED's, High Temp, Wide Operating Temperature

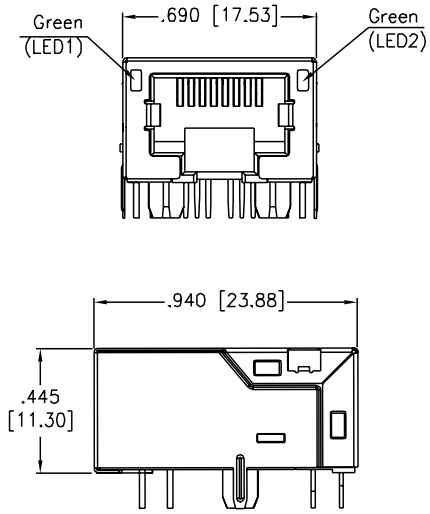

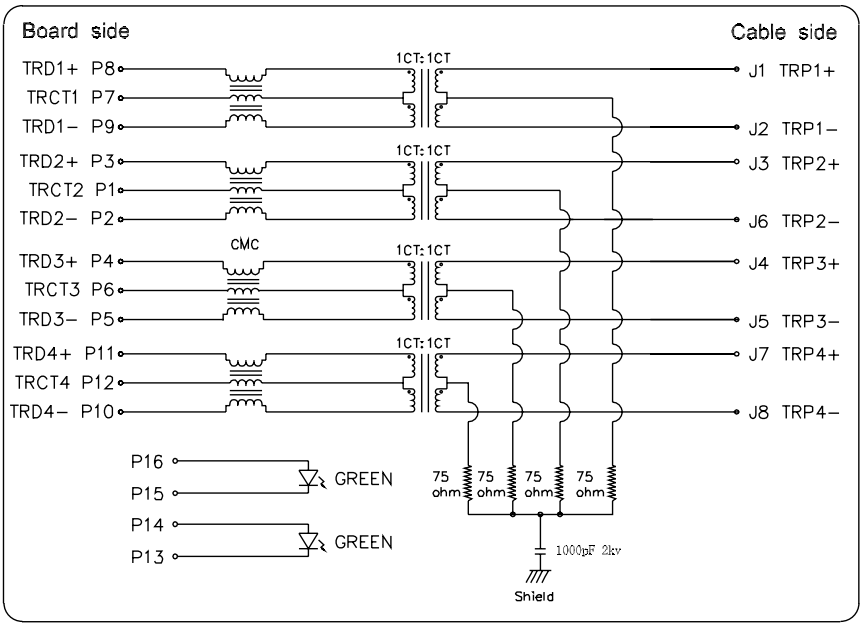

Click product box to view product datasheet at adam-tech.com

MTJ-88S11-PG-FSD-L36-M236Y-HT-WOT

RJ45, 8P8C, 1000 Base-T, Single Port, Right Angle, Tab Up, Full Shield, Panel Grounds, Through Hole, Integral Magnetics, Green-Green/Orange LED's, High Temp, Wide Operating Temperature

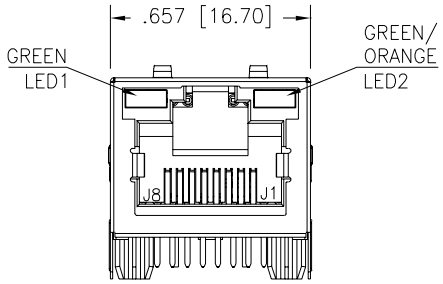

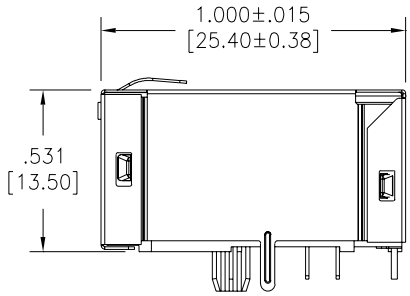

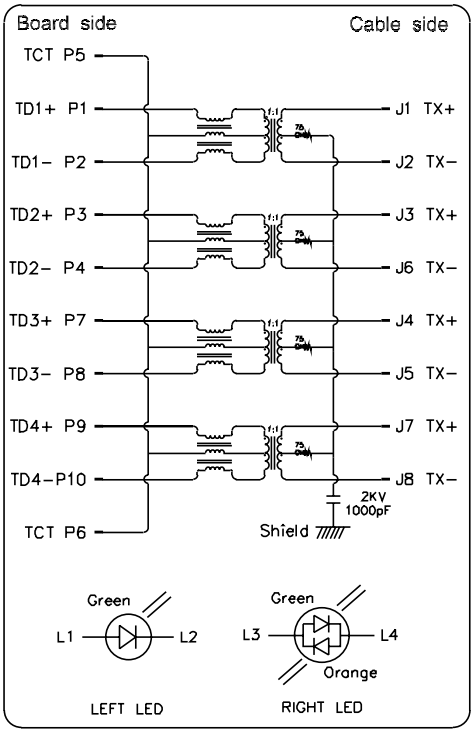

MTJ-88SX1-FSD-LG-M5Y-HT-WOT

RJ45, 8P8C, 10/100 Base-T, Single Port, Right Angle, Tab Up, Full Shield, Through Hole, Integral Magnetics, Yellow-Green LED's, High Temp, Wide Operating Temperature

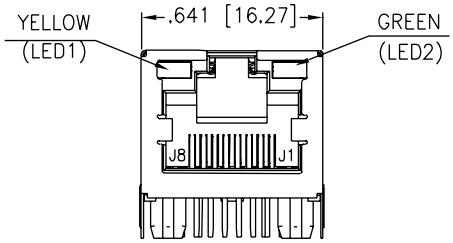

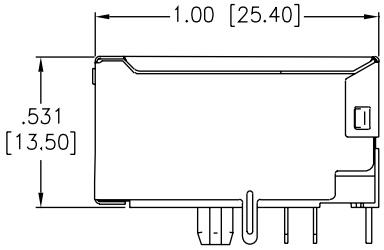

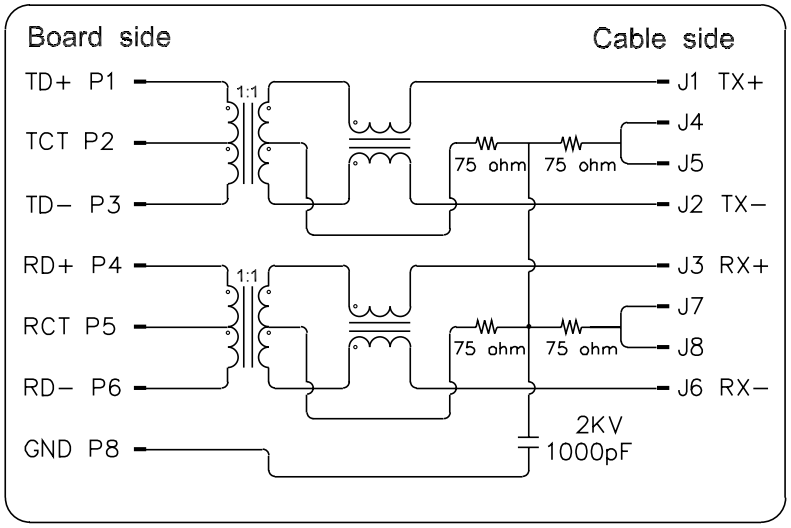

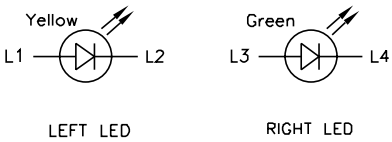

Click product box to view product datasheet at adam-tech.com

MTJ-88SX1-FSD-PG-LG-M14Y

RJ45, 8P8C, 10/100 Base-T, Single Port, Right Angle, Tab Up, Full Shield, Through Hole, Integral Magnetics, Yellow-Green LED's

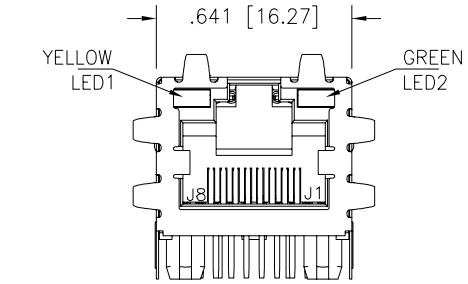

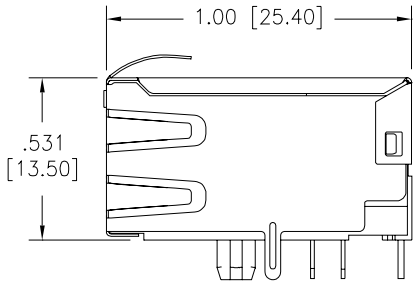

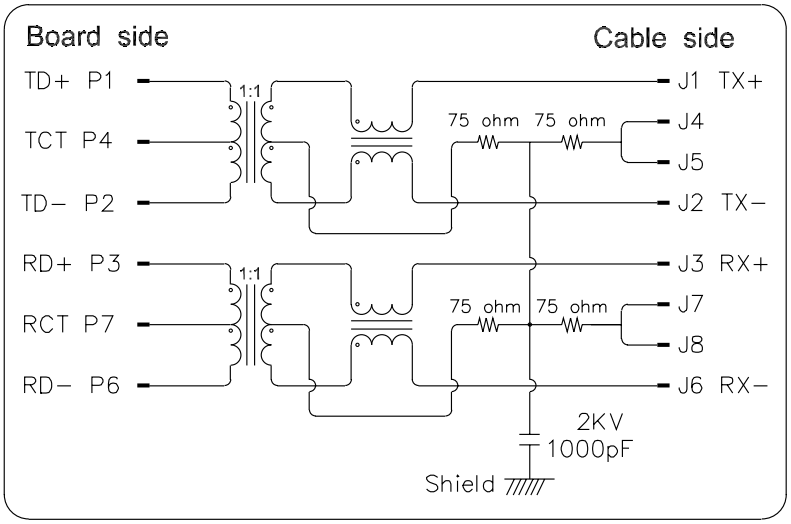

MTJ-88SX1-FSD-PG2-L37-M346Y

RJ45, 8P8C, 10/100 Base-T, Single Port, Right Angle, Tab Up, Full Shield, Top Panel Grounds, Through Hole, Integral Magnetics, Green/Orange-Green LED's

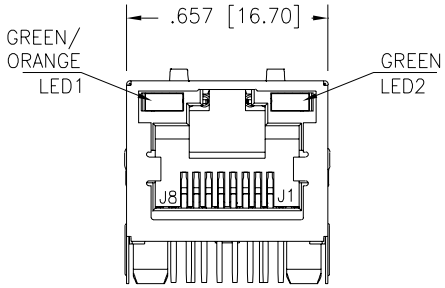

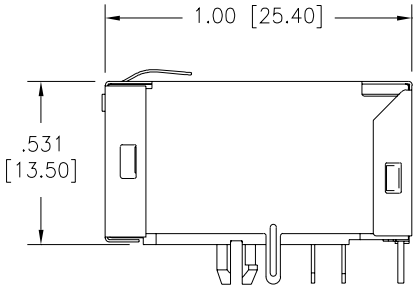

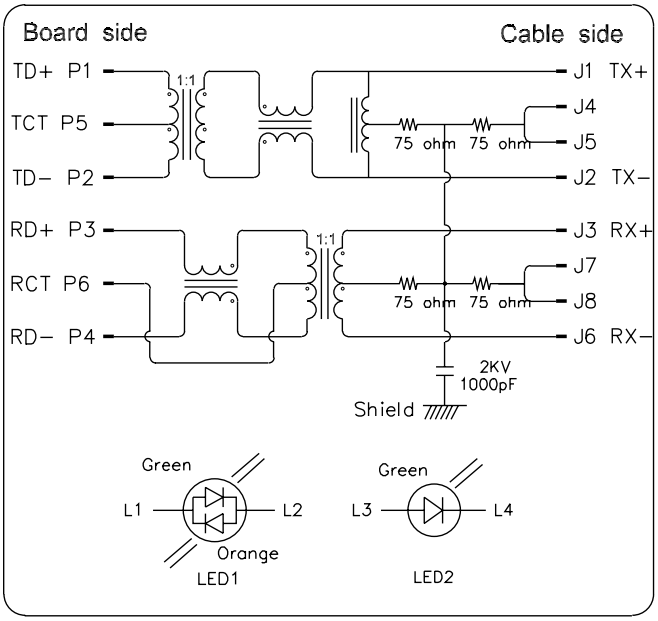

Click product box to view product datasheet at adam-tech.com

MTJ-88SX1-FSD-PG2-L37-M346YA

RJ45, 8P8C, 10/100 Base-T, Single Port, Right Angle, Tab Up, Full Shield, Top Panel Grounds, Through Hole, Integral Magnetics, Green/Orange-Green LED's, Surge Protection

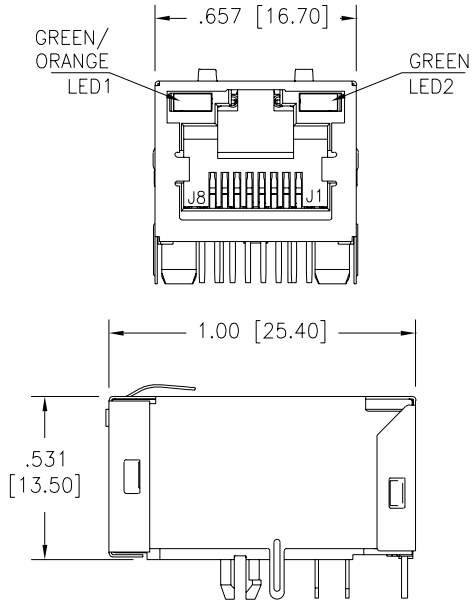

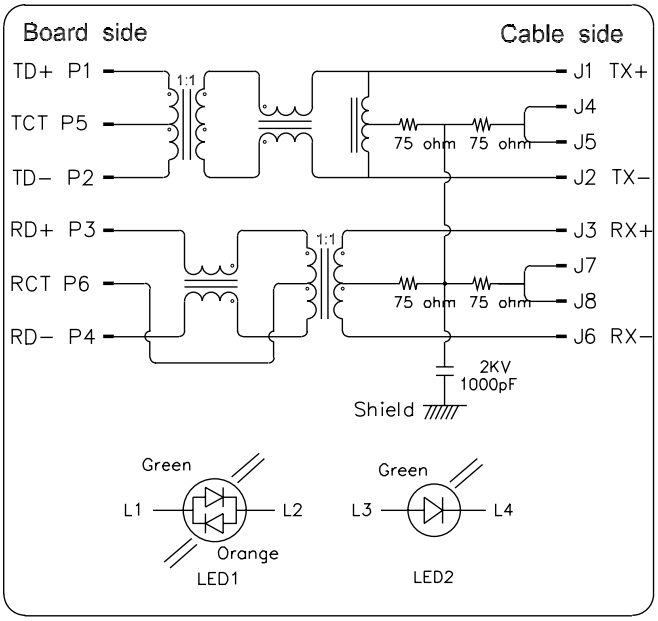

MTJ-88SX1-FSP-PG-LG-M3Y

RJ45, 8P8C, 10/100 Base-T, Single Port, Right Angle, Tab Up, Full Shield, Panel Grounds, Through Hole, Integral Magnetics, Yellow-Green LED's

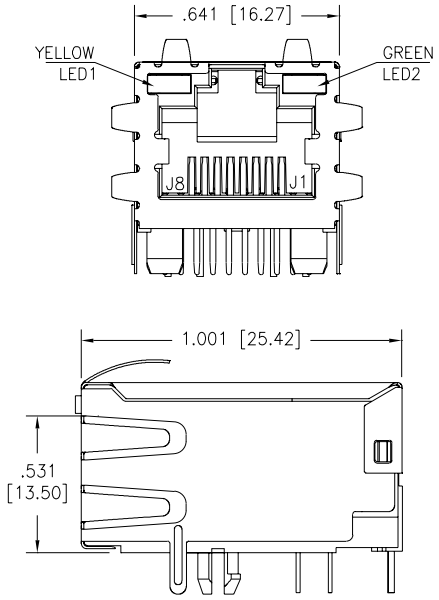

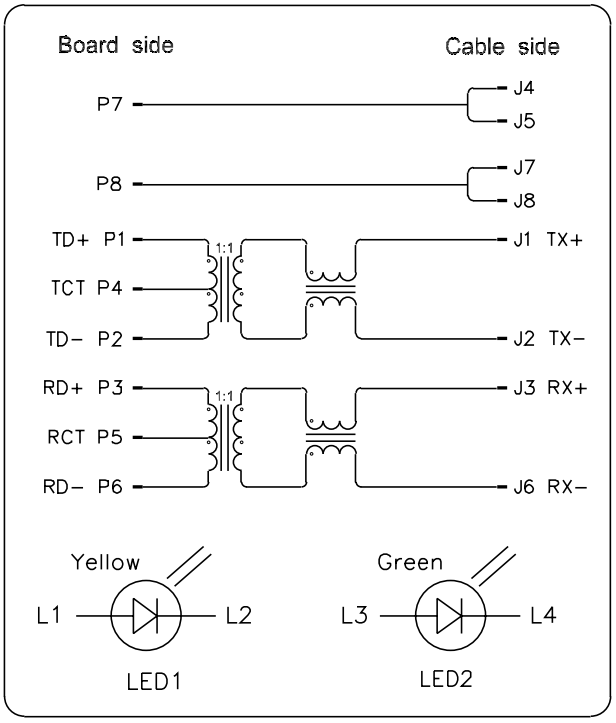

Click product box to view product datasheet at adam-tech.com

MTJ-88SX1-L35-M397Y-HT

RJ45, 8P8C, 1G Base-T, Single Port, Right Angle, Tab Up, Unshielded, Through Hole, Integral Magnetics, Green-Green/ Yellow LED's, High Temp

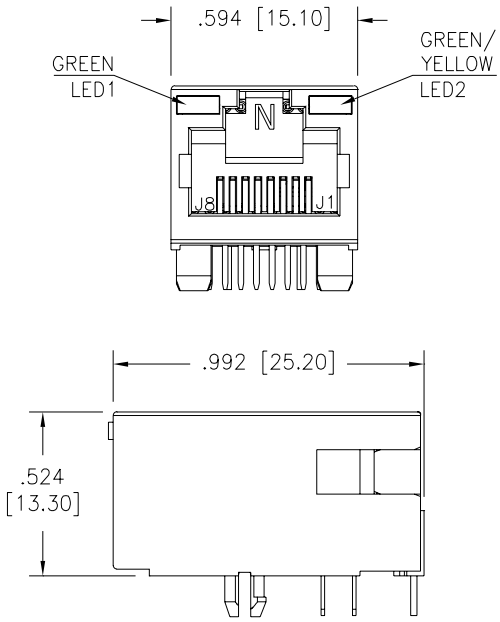

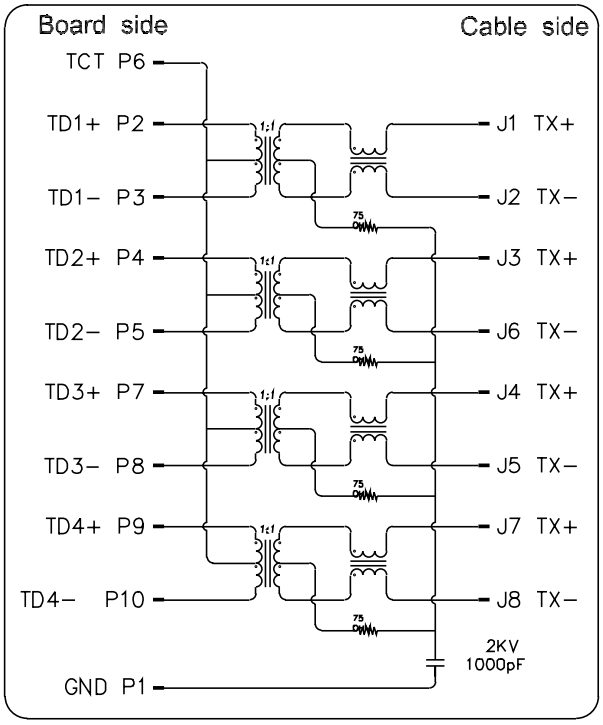

MTJ-88TX1-FS-M4Y-SMT

RJ45, 8P8C, 10/100 Base-T, Single Port, Right Angle, Tab Down, Full Shield, Surface Mount, Integral Magnetics

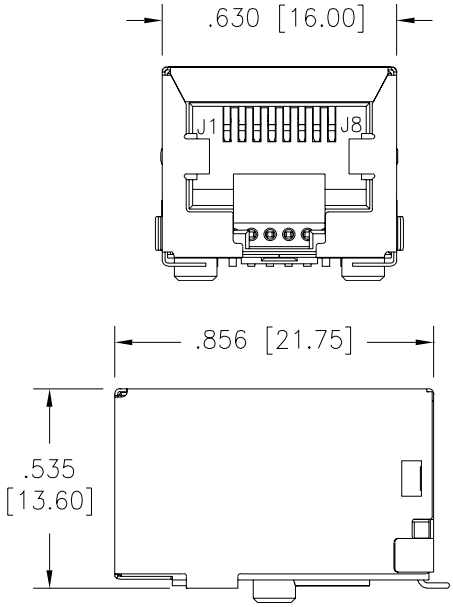

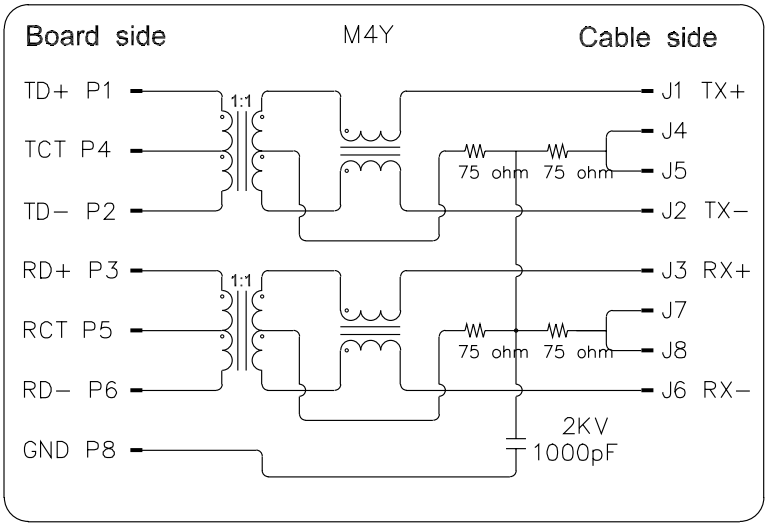

Click product box to view product datasheet at adam-tech.com

MTJ-88TX1-FSD-083-M171Y-A-X6

RJ45, 8P8C, 100 Base-T PoE, Single Port, Right Angle, Tab Down, Full Shield, Through Hole, Integral Magnetics

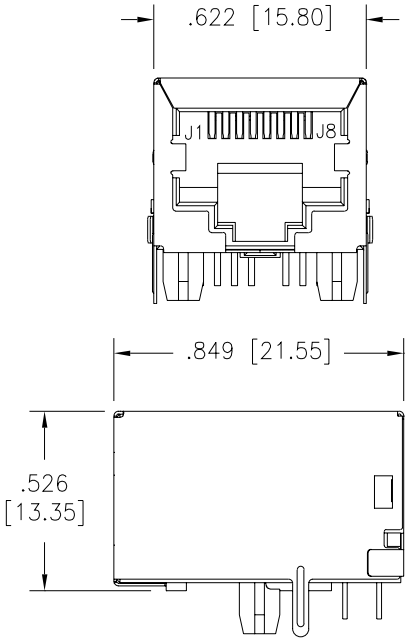

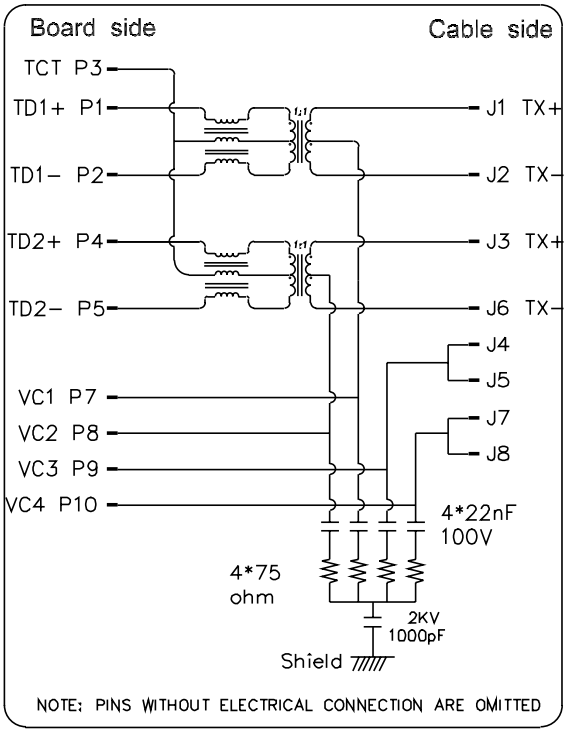

MTJ-88TX1-FSD-LH-M365BC-WOT

RJ45, 8P8C, 25G Base-T, Single Port, Right Angle, Tab Down, Full Shield, Through Hole, Integral Magnetics, Green-Yellow LED's, Wide Operating Temperature

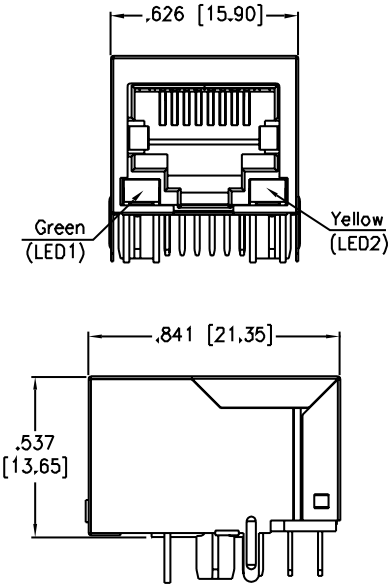

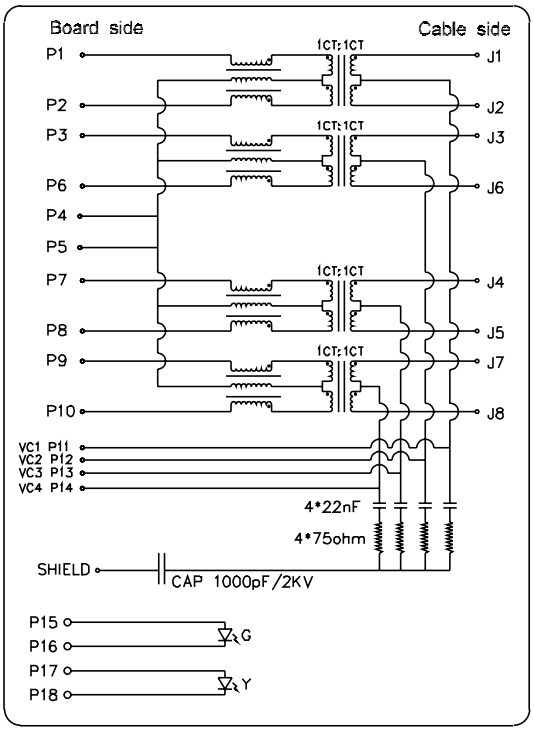

Click product box to view product datasheet at adam-tech.com

MTJ-88TX1-FSE-PG-LG-M5Y

RJ45, 8P8C, 10/100 Base-T, Single Port, Right Angle, Tab Down, Full Shield, Tab Up & Down, Panel Grounds, Through Hole, Integral Magnetics, Yellow- Green LED's

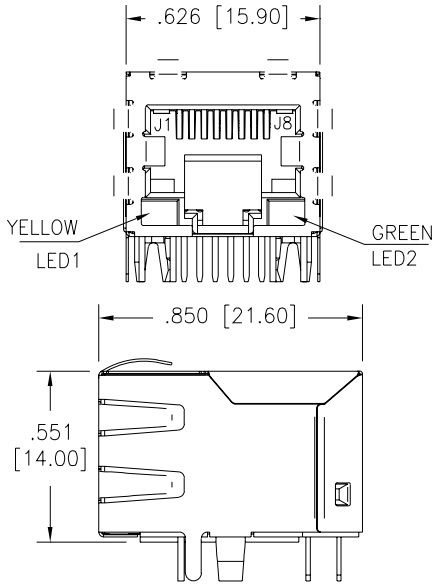

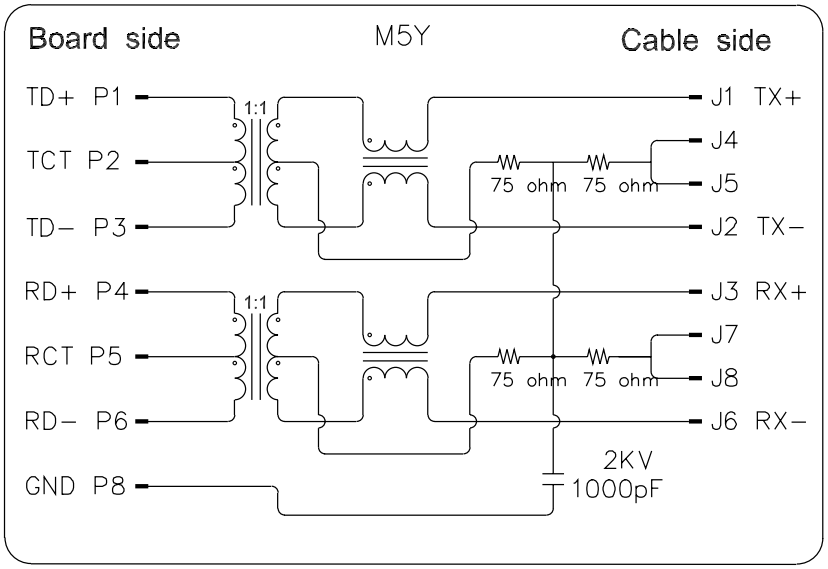

MTJG-2-88JX1-FS-PG-LTP-M464Y-WOT

RJ45, 8P8C, 10G Base -T, 2 Port Stacked, Right Angle, Tab Up & Down, Full Shield, Through Hole, Integral Magnetics, Light Pipes, Wide Operating Temperature

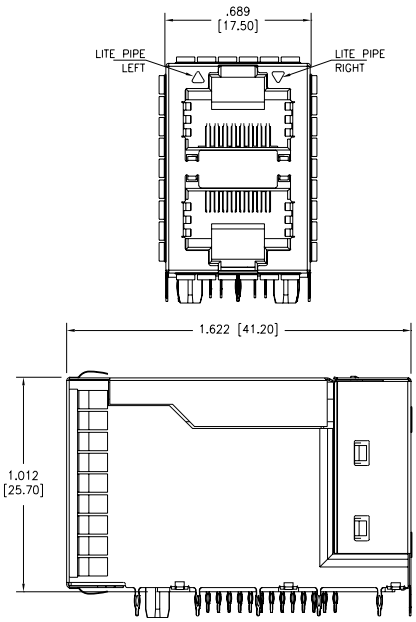

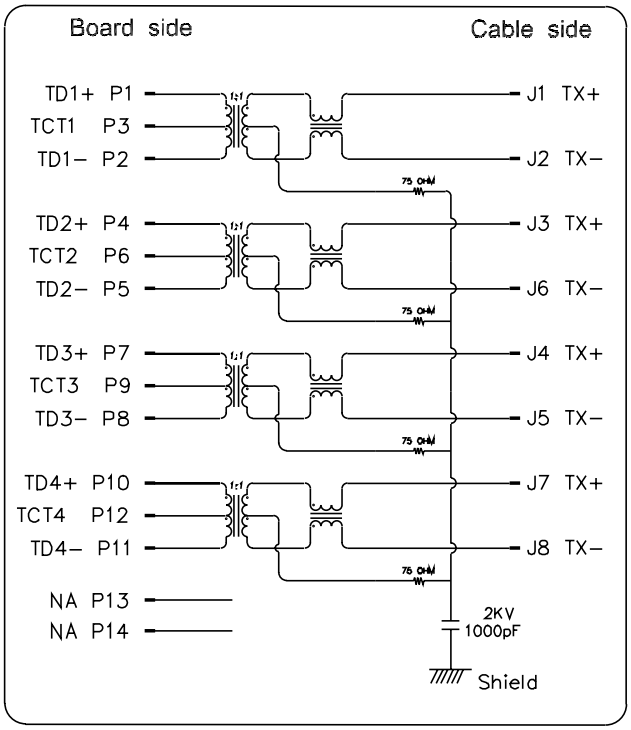

Click product box to view product datasheet at adam-tech.com

MTJG-2-88JX1-V-FSG-L16-M169Y

RJ45, 8P8C, 100 Base-T, 2 Port Stacked, Right Angle, Tab Up & Down, Full Shield, Through Hole, Integral Magnetics, Green/ Yellow-Green/Yellow LED's

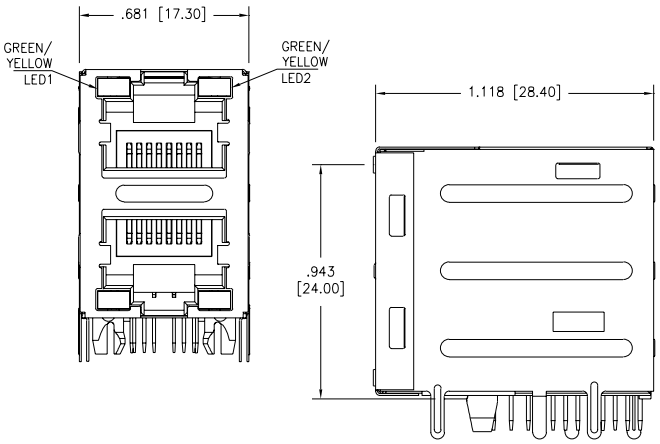

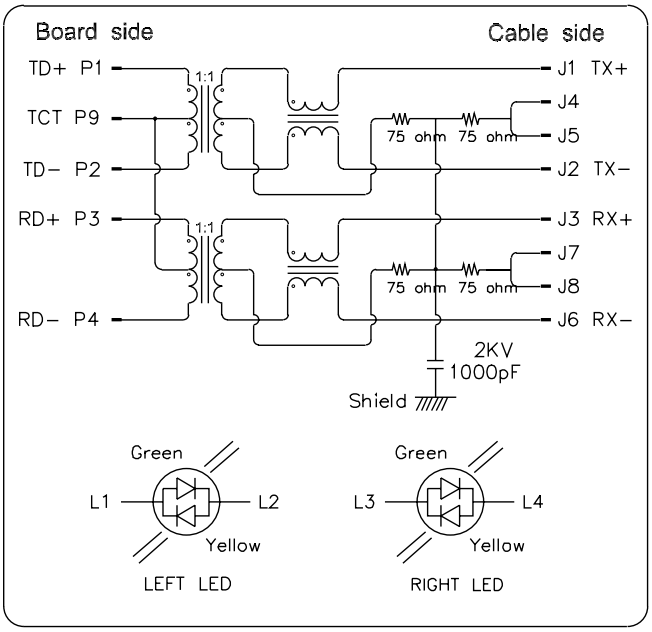

MTJG-4-88JX1-FSG-L5-M150Y-HT

RJ45, 8P8C, 1000 Base-T, 4 Port Ganged & Stacked, Right Angle, Tab Up & Down, Full Shield, Through Hole, Integral Magnetics, Green-Orange LED's, High Temp

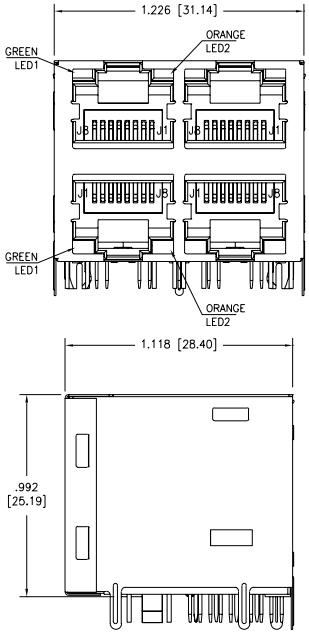

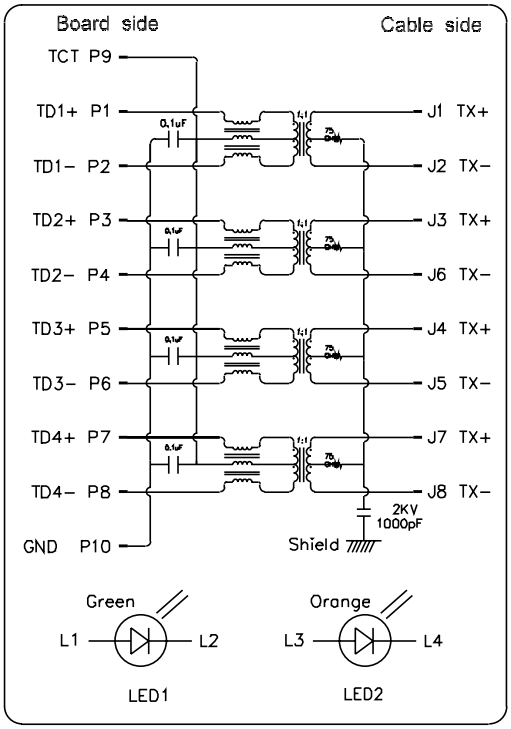

Click product box to view product datasheet at adam-tech.com

MTJG-4-88TX1-FSD-PG-LH-M21Y-HT

RJ45, 8P8C, 1G Base-T, 4 Port Ganged, Right Angle, Tab Down, Full Shield, Panel Grounds, Through Hole, Integral Magnetics, Green-Yellow LED's, High Temp

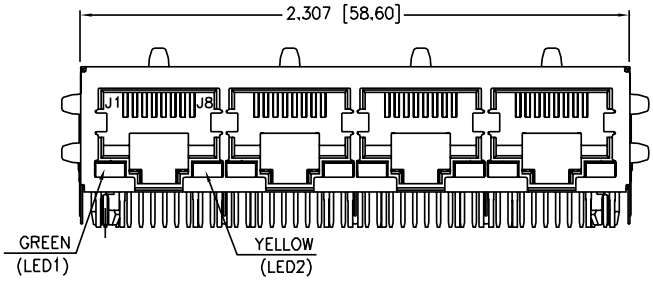

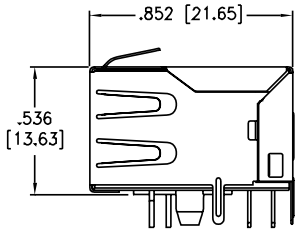

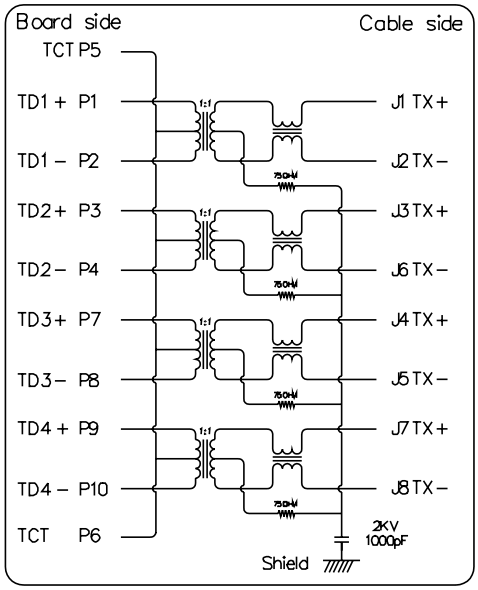

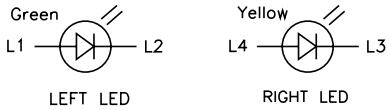

MTJG-4-88TX1-FSD-M5Y-HT

RJ45, 8P8C, 10/100 Base-T, 4 Port Ganged, Right Angle, Tab Down, Full Shield, Through Hole, Integral Magnetics, High Temp

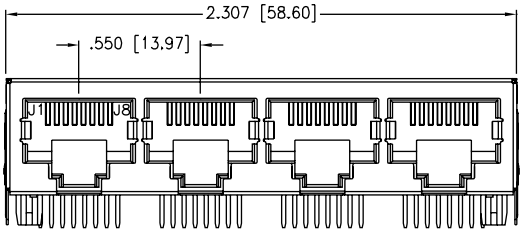

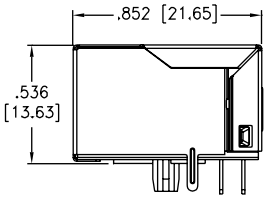

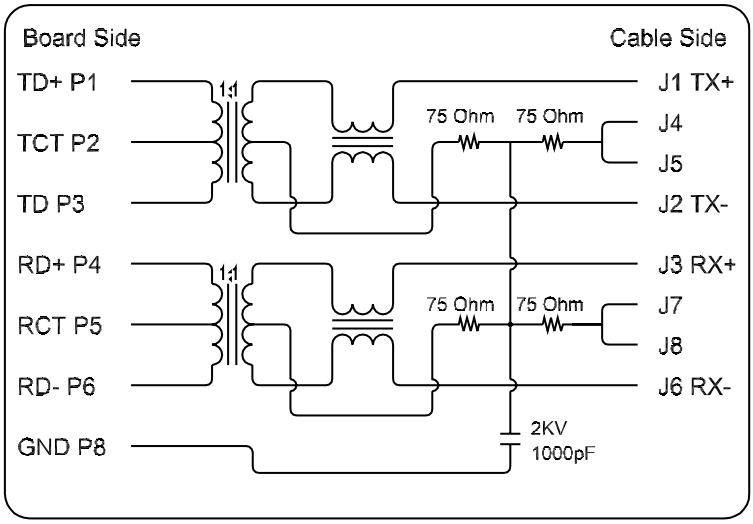

Click product box to view product datasheet at adam-tech.com

MTJG-6-88JX1-FSG-PG-L35-M150Y-WOT

RJ45, 8P8C, 1000 Base-T, 6 Port Ganged & Stacked, Right Angle, Tab Up & Down, Full Shield, Panel Grounds, Through Hole, Integral Magnetics, Green-Green/Yellow LED's, Wide Operating Temperature

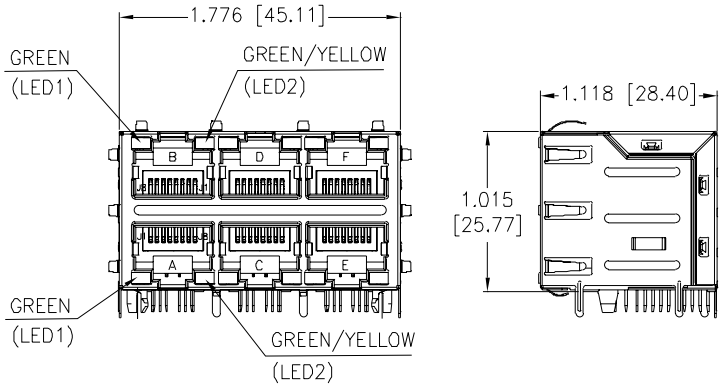

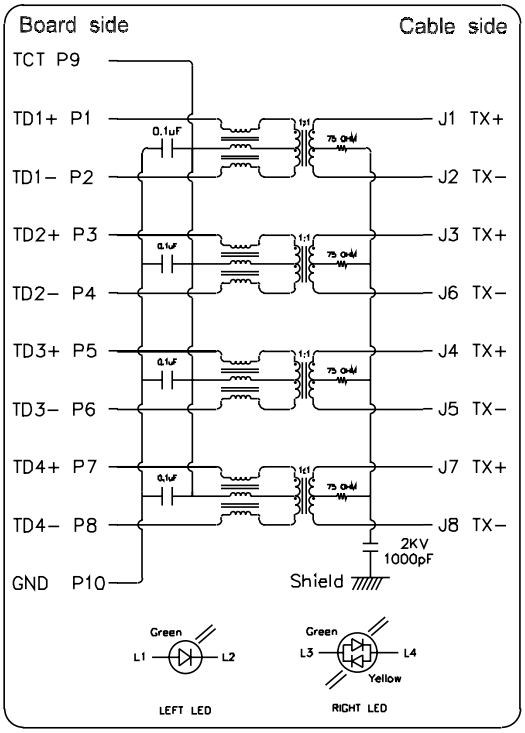

MTJG-8-88JX1-FS-PG-LH-M295YA-HT-WOT

RJ45, 8P8C, 1000 Base-T, 8 Port Ganged & Stacked, Right Angle, Tab Up & Down, Full Shield, Panel Grounds, Through Hole, Integral Magnetics, Green-Yellow LED's, High Temp, Wide Operating Temperature

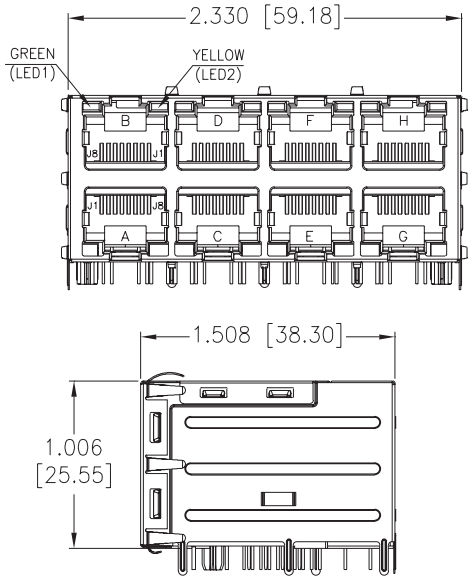

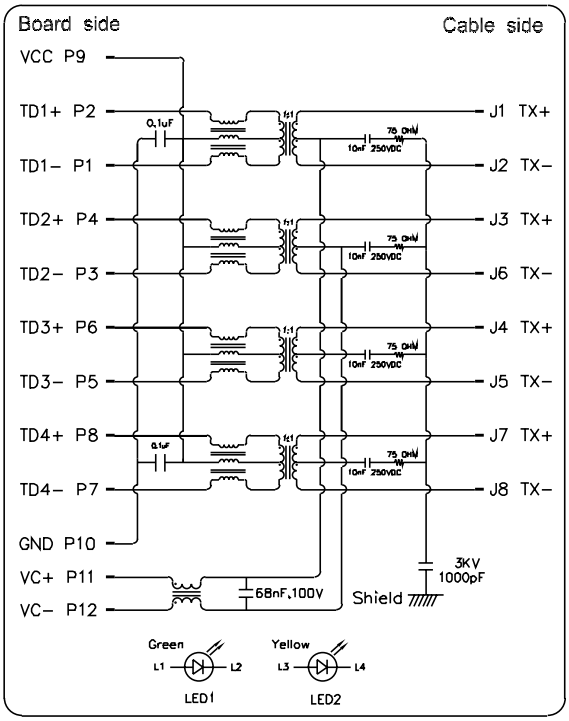

Click product box to view product datasheet at adam-tech.com

MTJ-USB-88JX1-FS-PG-L29-M49Y

RJ45 8P8C Over USB 2.0, 1G Base-T, Right Angle, Tab Up, Full Shield, Panel Grounds, Through Hole, Integral Magnetics, Green/Orange-Yellow LED's

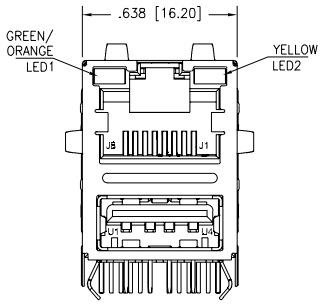

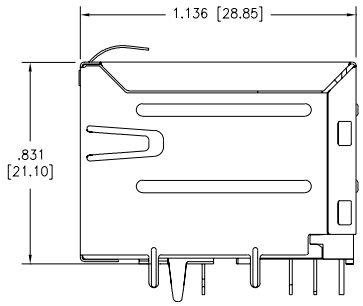

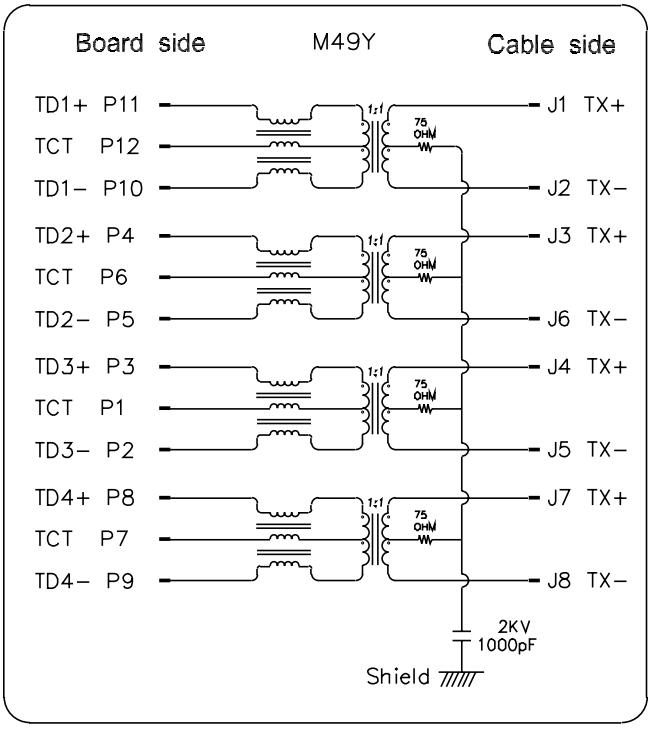

MTJ-DUSB-88JX1-FS-L29-M339Y

RJ45 8P8C Over Dual USB 2.0, 1G Base-T w/ protect component, Right Angle, Tab Up, Full Shield, Through Hole, Integral Magnetics, Green/Orange-Yellow LED's

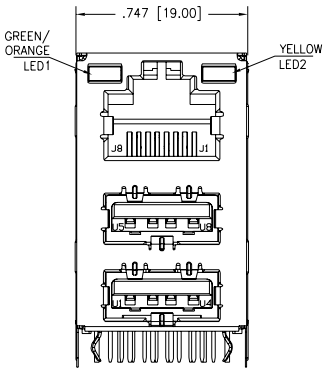

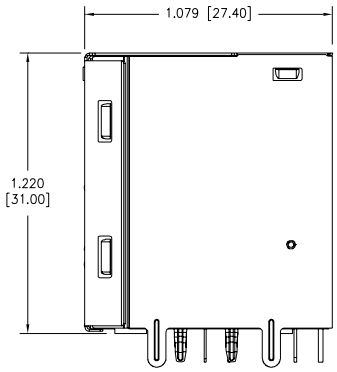

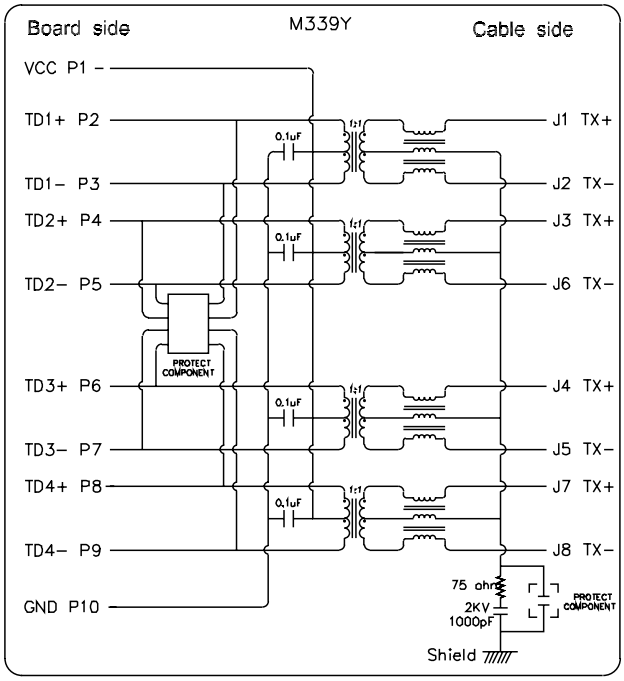

Click product box to view product datasheet at adam-tech.com

To contact us, scan the QR code to reach our website inquiry form.

adam-tech.com

Created: Aug-2024
Last Revised: Oct-2024

CONFIDENTIAL AND PROPRIETARY
© Adam Tech. All rights reserved. This document contains confidential and proprietary information belonging to Adam Tech. It is provided solely for design and reference purposes by authorized parties. Any reproduction, distribution, display, or disclosure to third parties, in whole or in part, without the prior written consent of Adam Tech, is strictly prohibited. Adam Tech retains all rights, including copyright, trademark, trade secret, and all other intellectual property rights worldwide.