Rev	AWO #	Description	Date	Appr
-		RELEASED	3/25/14	

APPROVED: _____

DATE: _____ TITLE: _____

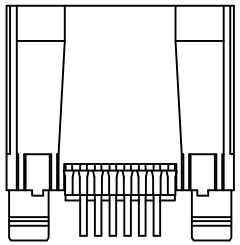

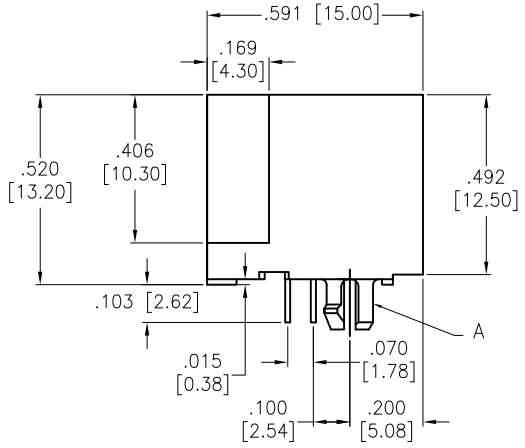

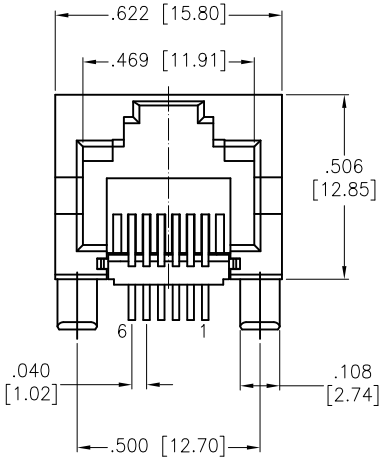

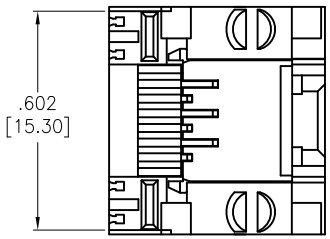

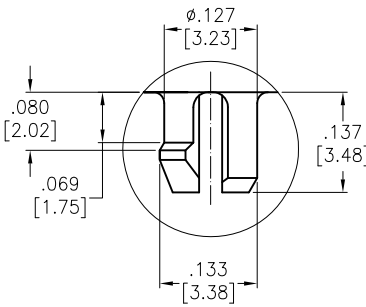

DETAIL A

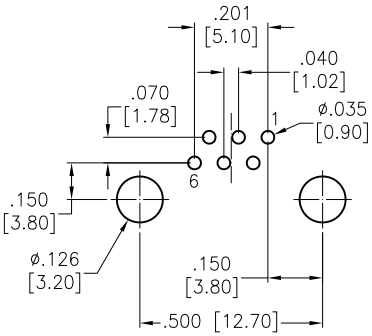

RECOMMENDED PCB LAYOUT

SPECIFICATIONS:

Material:

Insulator: Hi-temp thermoplastic, rated UL 94V-0

Insulator color: Black

Contacts: Phosphor Bronze

Contact Plating:

Gold Flash over Nickel underplate on contact area,
Tin over Copper underplate on tails
(See chart for thickness).

Electrical:

Operating voltage: 150V AC max.

Current rating: 1.5 Amps max.

Contact resistance: 20 Mohms max. initial

Insulation resistance: 500 Mohms min

Dielectric withstanding voltage: 1000 VAC for 1 minute

Temperature Rating:

Operating temperature: 0°C to +70°C

Environmental:

Lead free, RoHS compliant.

RoHS COMPLIANT

X	PLATING
0	15 µin Gold
1	30 µin Gold
2	50 µin Gold
6	6 µin Gold

UNLESS OTHERWISE SPECIFIED
ALL DIMENSIONS ARE INCHES [MM]
TOLERANCES: EXCEPT AS NOTED

INCHES		HOLES	
.X	± .10	Ø.X	±.10
.XX	± .020	Ø.XX	±.015
.XXX	± .015	Ø.XXX	±.010

APPROVALS		DATE
DRAWN	HR	3/25/14
CHECKED	GH	3/25/14
APPROVED		

ADAM TECH
909 Rahway Avenue, Union, NJ 07083
Phone: 908-687-5000 Fax: 908-687-5710

TITLE: MODULAR TELEPHONE JACK, 8P6C
SIDE ENTRY, HI-TEMP

SIZE	PART NO.	REV.
X	MTJ-86ARX1-HT	-

REF: S00065T | SCALE: NTS | SHEET 1 OF 1