APPROVED: _____

DATE: _____ TITLE: _____

Rev	AWO #	Description	Date	Appr
-		RELEASED	10/4/04	
A		REVISED SHAPE	3/30/09	
B		REDRAWN	01/07/13	
C		REVISED SPEC.	6/30/15	AY
D		UPDATE DIM.	10/30/15	AY
E		UPDATE SPEC.	2/7/20	LH/NL

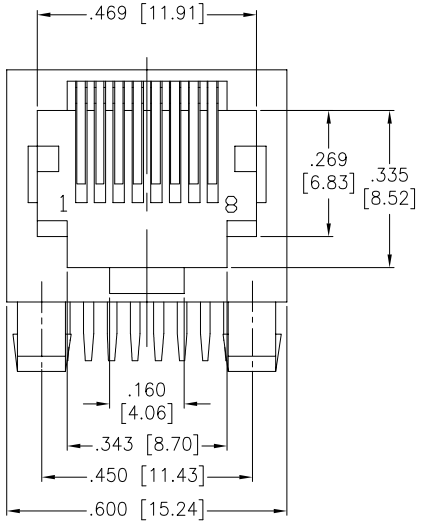

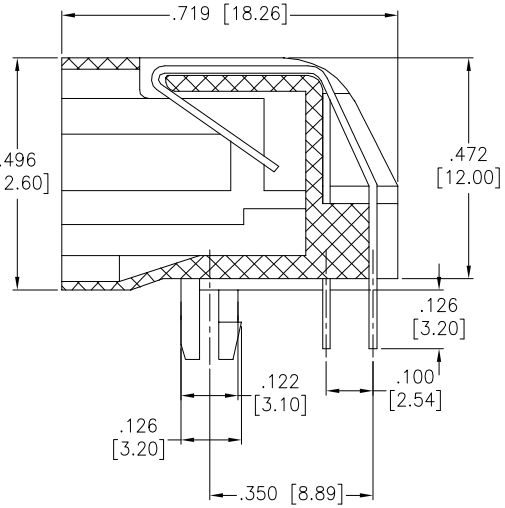

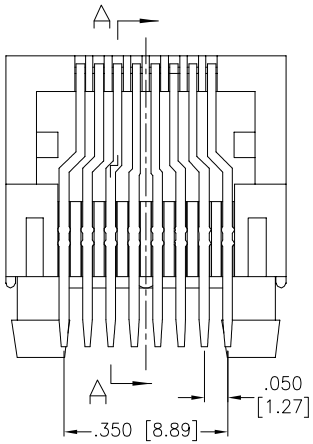

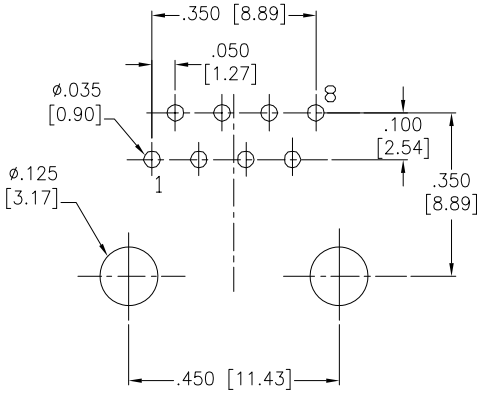

RECOMMENDED PCB LAYOUT

SPECIFICATIONS:

Material:
Insulator: PBT, rated UL 94V-0
Insulator color: Black
Contacts: Phosphor Bronze

Plating:
Round contact
Gold over Nickel underplate overall
Flat contact
Gold over Nickel underplate on contact area
Matte Tin over Nickel underplate on solder tails

Electrical:
Voltage rating: 125 VAC RMS
Current rating: 1.5 Amp
Contact resistance: 20 mohms max
Insulation resistance: 1000 Mohms min @ 500 VDC
Dielectric withstanding voltage: 1,000 VAC RMS 60HZ for 1 minute

Temperature Rating:
Operating temperature: -40°C to +85°C

Environmental:
Lead free, RoHS Compliant

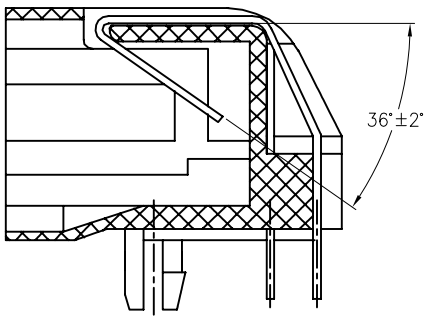

SECTION A-A

RoHS COMPLIANT

UNLESS OTHERWISE SPECIFIED
ALL DIMENSIONS ARE INCHES [MM]
TOLERANCES: EXCEPT AS NOTED

INCHES		HOLES	
.X	± .10	Ø.X	±.10
.XX	± .020	Ø.XX	±.015
.XXX	± .015	Ø.XXX	±.010

APPROVALS		DATE
DRAWN	SS	10/4/04
CHECKED		
APPROVED		

ADAM TECH INTERCONNECTS
909 Rahway Avenue,
Union, NJ 07083
Phone: 908-687-5000
Fax: 908-687-5710

TITLE: MODULAR TELEPHONE JACK, 8P8C
RIGHT ANGLE, PCB

SIZE	PART NO.	REV.
X	MTJ-880X1-N	E

REF:	SCALE:	SHEET
S00005C	NTS	1 OF 1