Rev	AWO #	Description	Date	Appr
-		RELEASED	6/27/12	
A		REVISED SPEC.	6/30/15	AY
B		UPDATE DIM.	10/30/15	AY

APPROVED: _____

DATE: _____ TITLE: _____

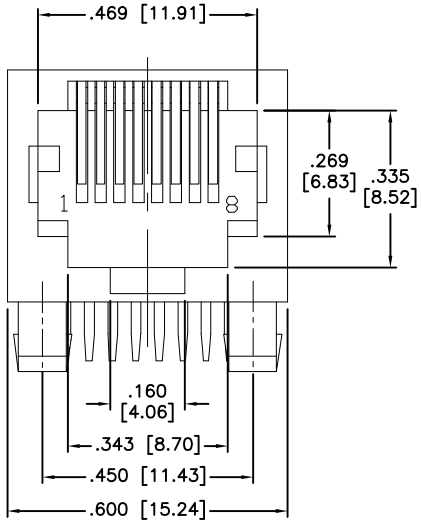

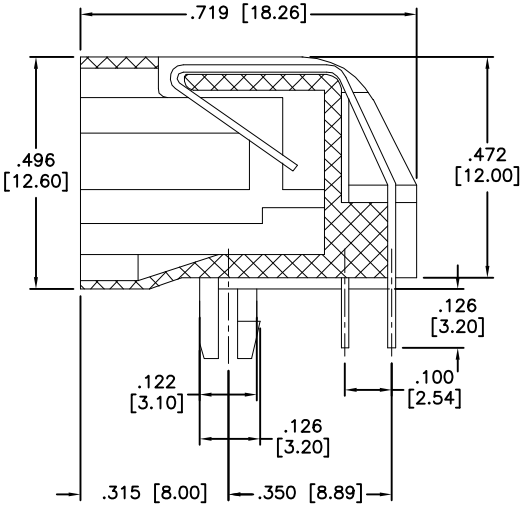

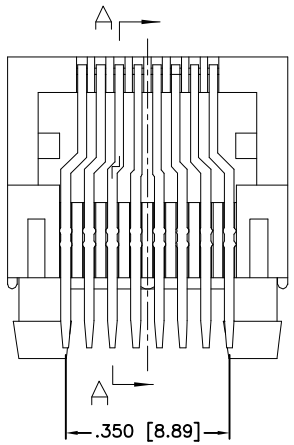

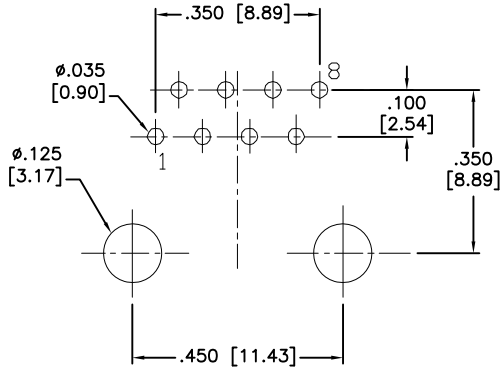

RECOMMENDED PCB LAYOUT

SPECIFICATIONS:
Material:
Insulator: PBT, rated UL 94V-0
Insulator color: Red, Pantone color P485C
Contacts: Phosphor Bronze
Cantacts Plating:
Flat contact
Gold over Nickel underplate on contact area,
Tin over Copper underplate on solder tails
Round contact
Gold over Nickel underplate overall
(See chart for thickness)
Electrical:
Operating voltage: 125 VAC max
Current rating: 1.5 Amps max
Contact resistance: 20 mohms max
Insulation resistance: 1000 Mohms min @ 500 VDC
Dielectric withstanding voltage: 1000 VAC for 1 minute
Temperature Rating:
Operating temperature: -40°C to +85°C
Environmental:
Lead free, RoHS Compliant

RoHS COMPLIANT

X	PLATING
0	15 µIn Gold
1	30 µin Gold
2	50 µin Gold

UNLESS OTHERWISE SPECIFIED
ALL DIMENSIONS ARE INCHES [MM]
TOLERANCES: EXCEPT AS NOTED

INCHES		HOLES	
.X	± .10	Ø.X	±.10
.XX	± .020	Ø.XX	±.015
.XXX	± .015	Ø.XXX	±.010

APPROVALS		DATE
DRAWN	AY	6/27/12
CHECKED	SC	6/27/12
APPROVED		

ADAM TECH
909 Rahway Avenue, Union, NJ 07083
Phone: 908-687-5000 Fax: 908-687-5710

TITLE: MODULAR TELEPHONE JACK, 8P8C, R/A, PCB, RED PANTONE COLOR P485C

SIZE	PART NO.	REV.
X	MTJ-880X1-N-P485C	B

REF: S00005C | SCALE: NTS | SHEET 1 OF 1