APPROVED: _____

DATE: _____ TITLE: _____

Rev	AWO #	Description	Date	Appr
-		RELEASED	12/12/07	
A		REDRAWN	1/13/12	
B		UPDATE SPEC.	5/14/18	AY/KC

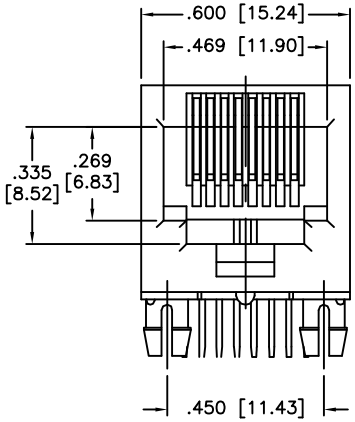

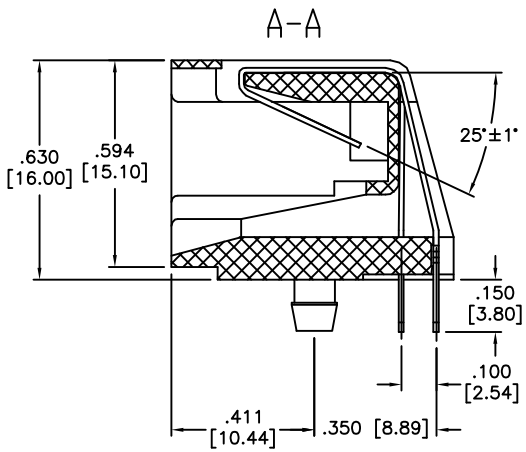

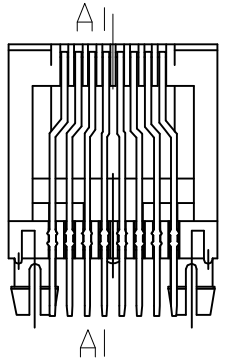

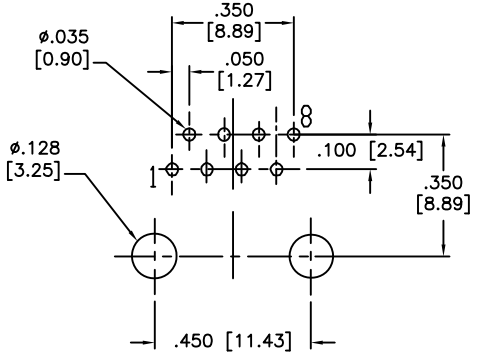

RECOMMENDED
PCB LAYOUT

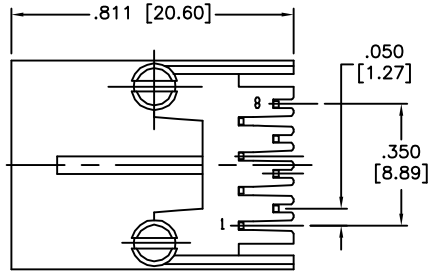

SPECIFICATIONS:
Material:
Insulator: PBT, rated UL 94V-0
Insulator color: Black
Contacts: Phosphor Bronze
Cantacts Plating:
Round contact
Gold over Nickel underplate overall
Flat contact
Gold over Nickel underplate on contact area,
Tin over Nickel underplate on solder tails
Electrical:
Voltage rating: 150 VAC RMS
Current rating: 1.5 Amp
Contact resistance: 20 mohms max
Insulation resistance: 1000 Mohms min @ 500 VDC
Dielectric withstanding voltage: 1000 VAC OR 1500 VDC RMS for 1 minute
Temperature Rating:
Operating temperature: -40°C to +85°C
Environmental:
Lead free, RoHS compliant.

RoHS COMPLIANT

UNLESS OTHERWISE SPECIFIED
ALL DIMENSIONS ARE INCHES [MM]
TOLERANCES: EXCEPT AS NOTED

INCHES		HOLES	
.X	± .10	Ø.X	±.10
.XX	± .020	Ø.XX	±.015
.XXX	± .015	Ø.XXX	±.010

APPROVALS		DATE
DRAWN	SS	12/12/07
CHECKED		
APPROVED		

ADAM TECH INTERCONNECTS
909 Rahway Avenue,
Union, NJ 07083
Phone: 908-687-5000
Fax: 908-687-5710

TITLE: MODULAR TELEPHONE JACK, 8P8C
RIGHT ANGLE, PCB, COLOR BLACK

SIZE	PART NO.	REV.
X	MTJ-881X1-N	B

REF: S00005C | SCALE: NTS | SHEET 1 OF 1