APPROVED: _____

DATE: _____ TITLE: _____

Rev	AWO #	Description	Date	Appr
-		RELEASED	4/6/05	
A		REDRAWN	8/31/11	
B		UPDATE SPEC. & ADDED DIM.	8/21/20	AY/RT

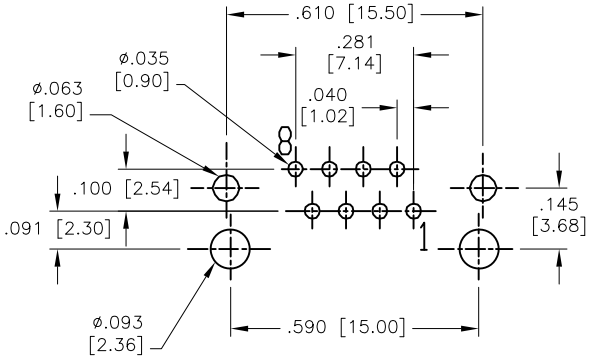

RECOMENDED PCB LAYOUT

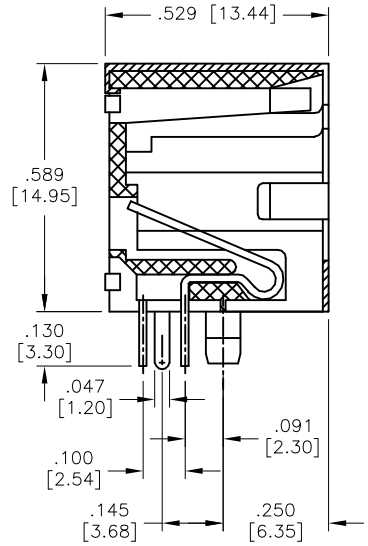

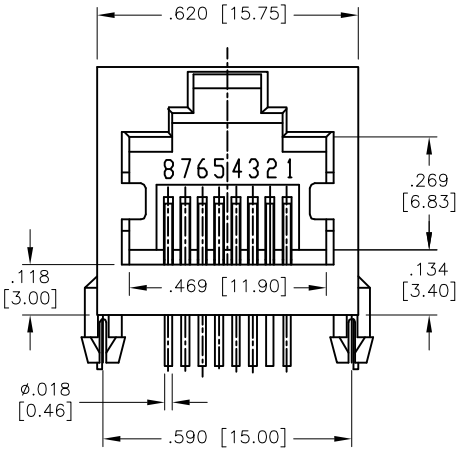

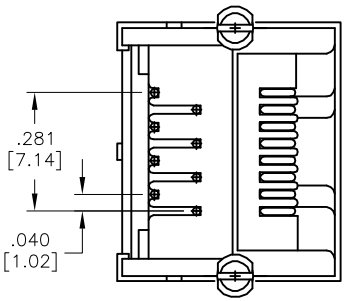

SPECIFICATIONS:

Material:

Insulator: PBT, rated UL 94V–0

Insulator color: Black

Contacts: Phosphor Bronze

Shield: Brass, Nickel plated

Plating:

Round contact

Gold over Nickel underplate overall

Flat contact

Gold over Nickel underplate on contact area

Tin over Nickel underplate on solder tails

Electrical:

Voltage rating: 150 VAC rms

Current rating: 1.5 Amp

Contact resistance: 20 mohms max

Insulation resistance: 1,000 Mohms min @ 500 VDC

Dielectric withstanding voltage: 1000 VAC or 1500 VDC for 1 minute

Temperature Rating:

Operating temperature: –40°C to +85°C

Environmental:

Lead free, RoHS compliant.

RoHS COMPLIANT

UNLESS OTHERWISE SPECIFIED
ALL DIMENSIONS ARE INCHES [MM]
TOLERANCES: EXCEPT AS NOTED

INCHES		HOLES	
.X	± .10	Ø.X	±.10
.XX	± .020	Ø.XX	±.015
.XXX	± .015	Ø.XXX	±.010

APPROVALS		DATE
DRAWN	SS	4/6/05
CHECKED		
APPROVED		

ADAM TECH INTERCONNECTS

909 Rahway Avenue,
Union, NJ 07083
Phone: 908-687-5000
Fax: 908-687-5710

TITLE: MODULAR TELEPHONE JACK, 8P8C
RIGHT ANGLE, PCB, FULL SHIELD

SIZE	PART NO.	REV.
X	MTJ-882BX1-FS	B

REF:	SCALE:	SHEET
S00005C	NTS	1 OF 1