Rev	AWO #	Description	Date	Appr
-		RELEASED	5/31/11	

APPROVED: _____

DATE: _____ TITLE: _____

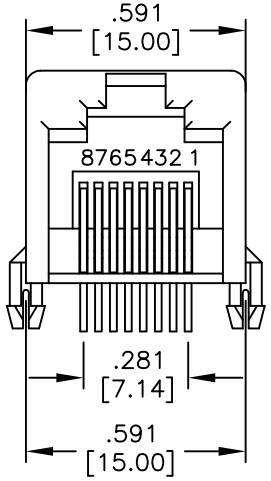

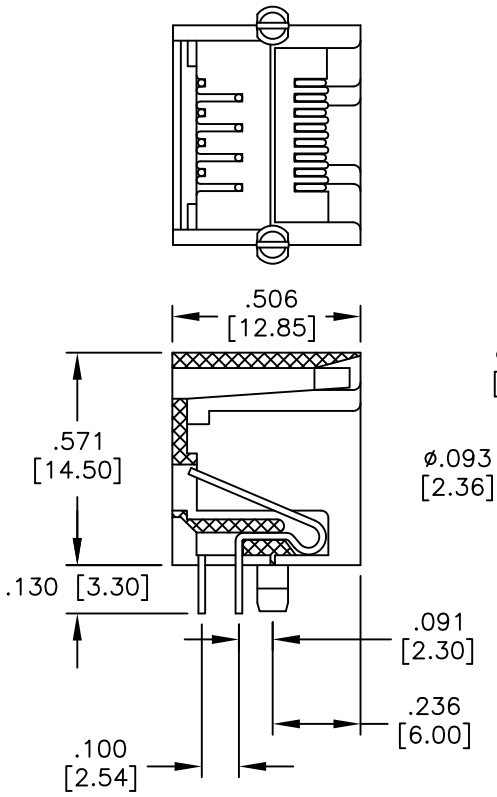

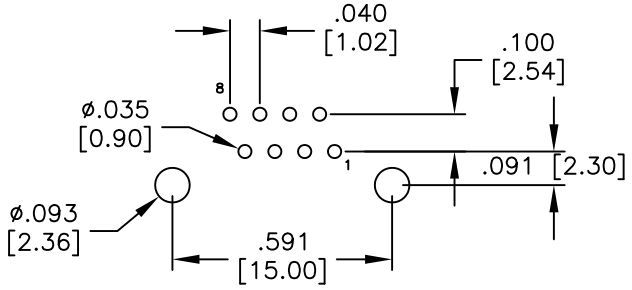

RECOMMENDED PCB LAYOUT

SPECIFICATIONS:

Material:

Insulator: Hi–temp Nylon, rated UL 94V–0

Insulator color: Black

Contacts: Phosphor Bronze

Plating:

X u" Gold over Nickel underplate on contact area, Tin over Copper underplate on tails (See chart)

Electrical:

Operating voltage: 125 VAC max

Current rating: 1.5 Amps max

Contact resistance: 35 mohms max

Insulation resistance: 1000 Mohms min @ 500 VDC

Dielectric withstanding voltage: 1000 VAC for 1 minute

Temperature Rating:

Operating temperature: –40°C to +85°C

Environmental:

Lead free, RoHS compliant.

Recommended soldering temp: 260° for 5 sec.

RoHS COMPLIANT

X	PLATING
0	15 µin Gold
1	30 µin Gold
2	50 µin Gold

UNLESS OTHERWISE SPECIFIED
ALL DIMENSIONS ARE INCHES [MM]
TOLERANCES: EXCEPT AS NOTED

INCHES		HOLES	
.X	± .10	Ø.X	±.10
.XX	± .020	Ø.XX	±.015
.XXX	± .015	Ø.XXX	±.010

APPROVALS		DATE
DRAWN	AY	5/31/11
CHECKED	AH	5/31/11
APPROVED		

ADAM TECH
909 Rahway Avenue, Union, NJ 07083
Phone: 908-687-5000 Fax: 908-687-5710

TITLE: MODULAR TELEPHONE JACK, 8P8C
RIGHT ANGLE, PCB, COLOR BLACK

SIZE	PART NO.	REV.
X	MTJ-882BX1-HT-T/R	-

REF: S00005C | SCALE: NTS | SHEET 1 OF 2

Rev	AWO #	Description	Date	Appr
SEE SHT 1 OF 2 FOR REVISION				

APPROVED: _____

DATE: _____ TITLE: _____

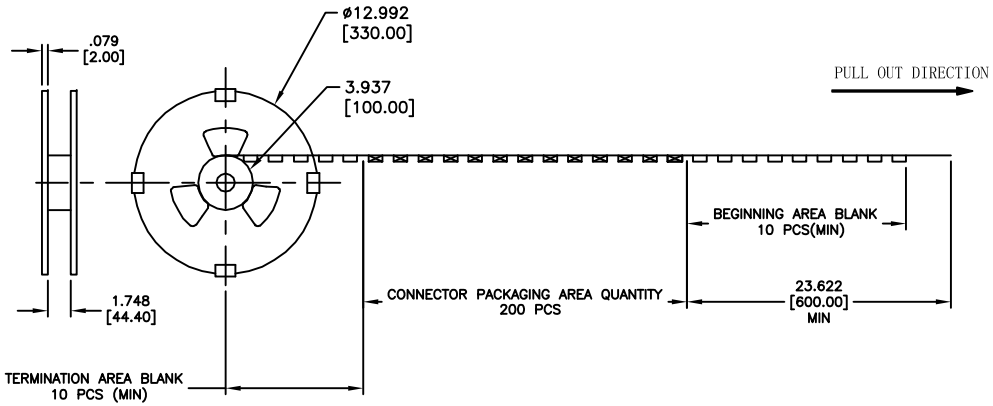

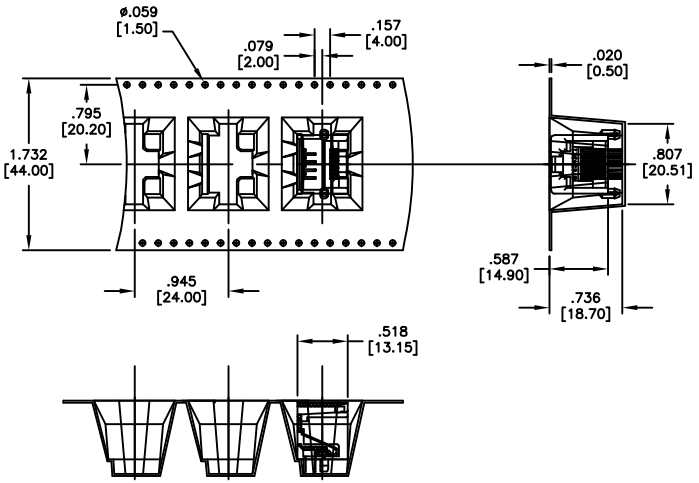

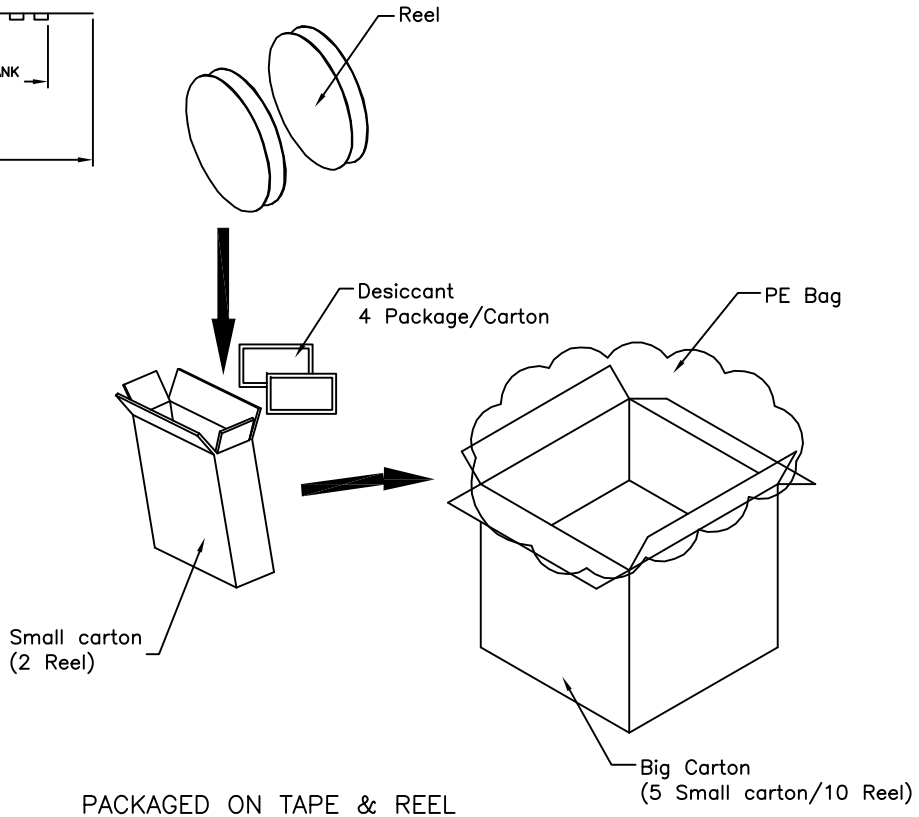

PACKAGED ON TAPE & REEL

Small Carton Dimension: 33.5X10.5X33.5CM
Small Carton: 2X200pcs=400pcs
Big Carton Dimension: 33.5X33.5X59.5CM
Big Carton:10X200pcs=2000pcs
PE Bag: 41.0*41.0*80.0CM

UNLESS OTHERWISE SPECIFIED
ALL DIMENSIONS ARE INCHES [MM]
TOLERANCES: EXCEPT AS NOTED

INCHES		HOLES	
.X	± .10	Ø.X	±.10
.XX	± .020	Ø.XX	±.015
.XXX	± .015	Ø.XXX	±.010

APPROVALS		DATE
DRAWN	AY	5/31/11
CHECKED	AH	5/31/11
APPROVED		

ADAM TECH
909 Rahway Avenue, Union, NJ 07083
Phone: 908-687-5000 Fax: 908-687-5710

TITLE: MODULAR TELEPHONE JACK, 8P8C
RIGHT ANGLE, PCB, COLOR BLACK

SIZE	PART NO.	REV.
X	MTJ-882BX1-HT-T/R	-

REF:	SCALE:	SHEET
S00005C	NTS	2 OF 2