APPROVED: _____

DATE: _____ TITLE: _____

Rev	AWO #	Description	Date	Appr
-		RELEASED	7/14/11	
A		RELEASED	7/5/16	HR/AY

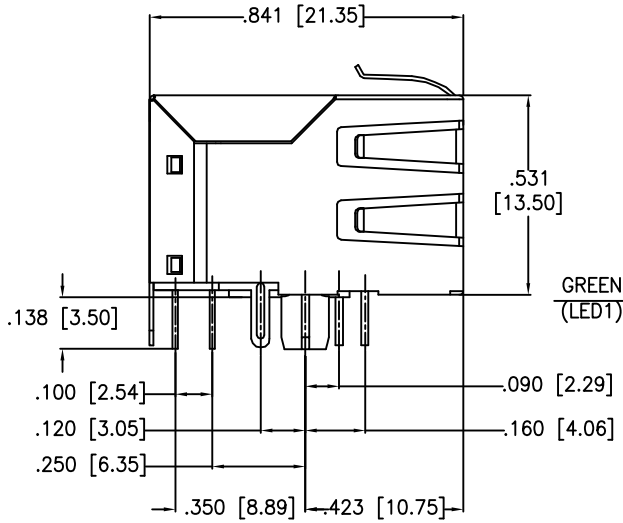

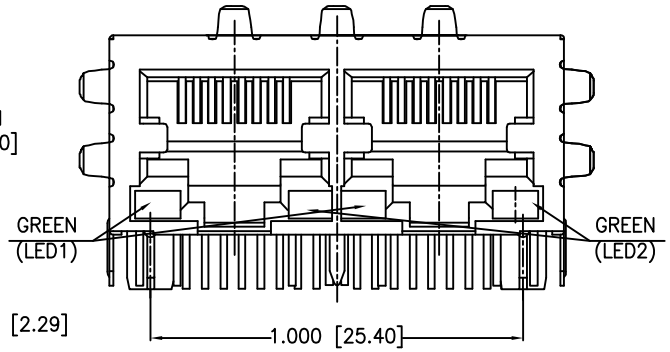

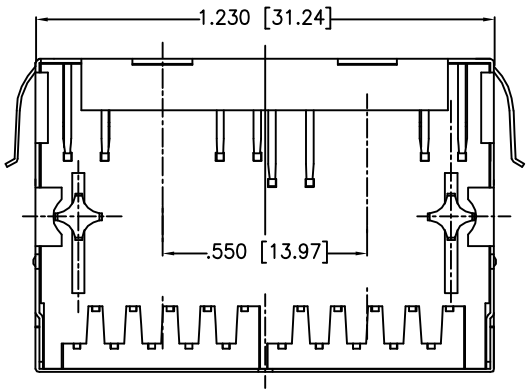

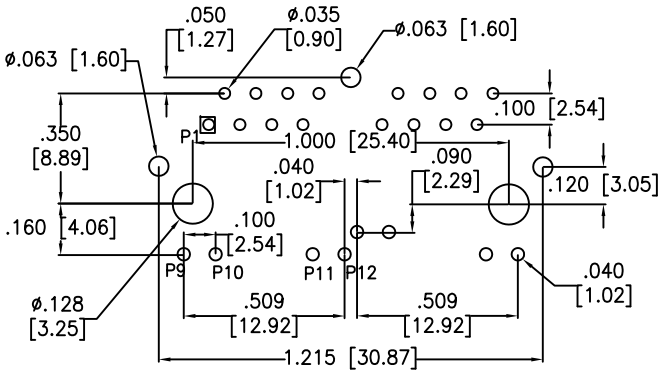

RECOMMENDED PCB LAYOUT

SPECIFICATIONS:
Material:
Insulator: PBT, glass reinforced, rated UL 94V-0
Insulator color: Black
Contacts: Copper Alloy
Shield: Copper Alloy, Nickel plated
Plating:
Round contact
Gold over Nickel underplate overall
Flat contact
Gold over Nickel underplate on contact area,
Tin over Nickel underplate on solder tails
(See chart for thickness)
Electrical:
Voltage rating: 150 VAC max
Current rating: 1.5 Amps max
Contact Resistance: 20 mohms max. initial
Insulation resistance: 500 Mohms min @ 500 VDC
Dielectric withstanding voltage: 1000 VAC for 1 minut
Temperature Rating:
Operating temperature: -40°C to +125°C
Environmental:
Lead free, RoHS compliant.

X	PLATING
0	15 µin Gold
1	30 µin Gold
2	50 µin Gold

RoHS COMPLIANT

UNLESS OTHERWISE SPECIFIED
ALL DIMENSIONS ARE INCHES [MM]
TOLERANCES: EXCEPT AS NOTED

INCHES		HOLES	
.X	± .10	Ø.X	±.10
.XX	± .020	Ø.XX	±.015
.XXX	± .015	Ø.XXX	±.010

APPROVALS		DATE
DRAWN	DY	7/14/11
CHECKED		
APPROVED		

ADAM TECH
909 Rahway Avenue, Union, NJ 07083
Phone: 908-687-5000 Fax: 908-687-5710

TITLE: MODULAR JACK GANGED, 2 PORT, 8P8C
W/ LED1 GREEN, LED2 GREEN

SIZE	PART NO.	REV.
X	MTJG-2-88TX1-FSD-PG-LD	A

REF: S00005C | SCALE: NTS | SHEET 1 OF 1