APPROVED: _____

DATE: _____ TITLE: _____

Rev	AWO #	Description	Date	Appr
-		RELEASED	4/21/05	
A		REDRAWN	11/19/09	
B		REVISED SHAPE	2/21/14	AY/YC
C		UPDATE DIM.	1/14/15	AY
D		UPDATE DRAWING	6/4/16	AY/MW
E		UPDATE SPEC.	12/26/19	AY/KL

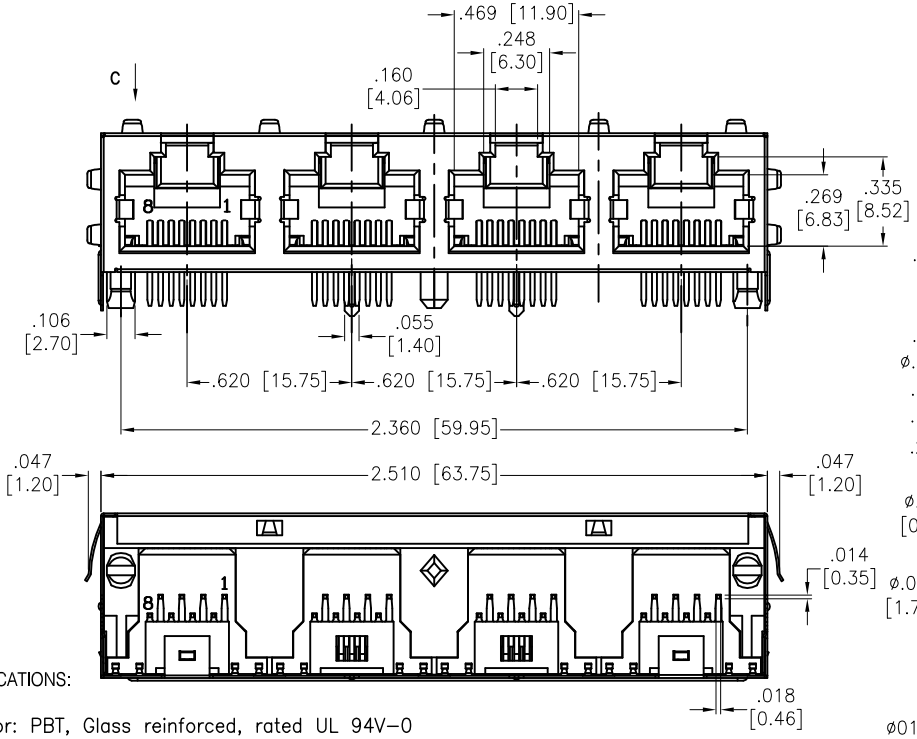

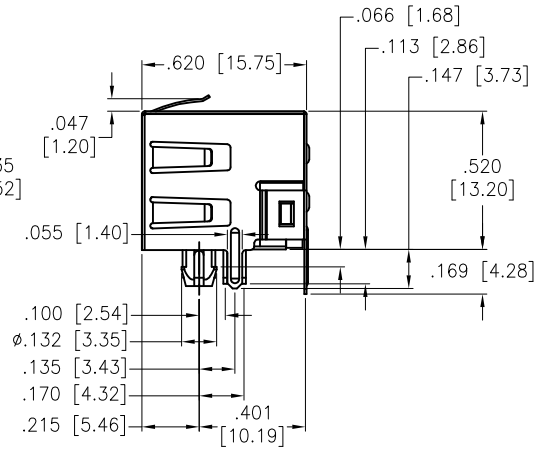

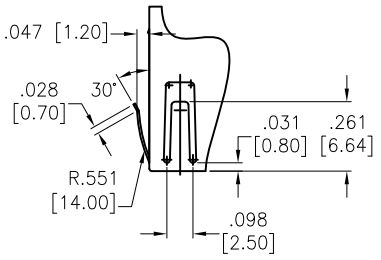

DETAIL C

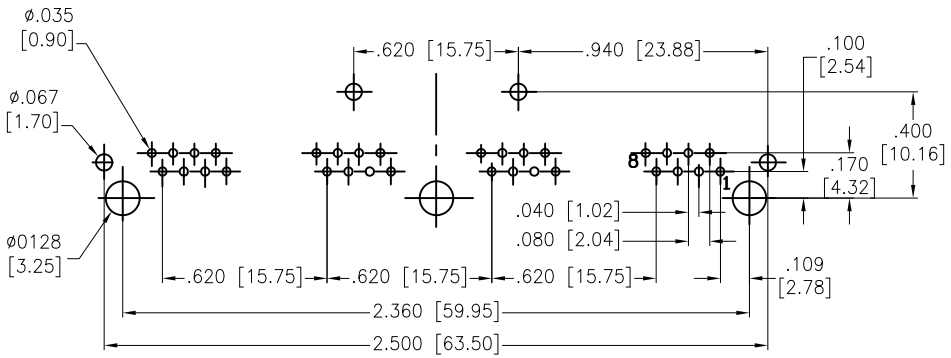

RECOMMENDED PCB LAYOUT

SPECIFICATIONS:

Material:
Insulator: PBT, Glass reinforced, rated UL 94V-0
Insulator color: Black
Contacts: Phosphor Bronze
Shield: Brass, Nickel plated
Contact Plating:
Round contact
Gold over Nickel underplate overall
Flat contact
Gold over Nickel underplate on contact area
Matte Tin over Nickel underplate on solder tails
Electrical:
Voltage rating: 150 VAC rms
Current rating: 1.5 Amp @ 25°C
Contact Resistance: 20 mohms max
Insulation resistance: 1,000 Mohms min @ 500 VDC
Dielectric withstanding voltage:
Contact to Contact: 1,000 VDC or AC Peak for 1 minute
Contact to Screen and Test panel: 1,500 VDC or AC Peak for 1 minute
Temperature Rating:
Operating temperature: -40°C to +85°C
Environmental:
Lead free, RoHS compliant.

RoHS COMPLIANT

UNLESS OTHERWISE SPECIFIED
ALL DIMENSIONS ARE INCHES [MM]
TOLERANCES: EXCEPT AS NOTED

INCHES		HOLES	
.X	± .10	Ø.X	±.10
.XX	± .020	Ø.XX	±.015
.XXX	± .015	Ø.XXX	±.010

APPROVALS		DATE
DRAWN	SLS	4/21/05
CHECKED		
APPROVED		

ADAM TECH INTERCONNECTS
909 Rahway Avenue,
Union, NJ 07083
Phone: 908-687-5000
Fax: 908-687-5710

TITLE
GANGED MODULAR TELEPHONE JACK, 8P8C, R/A

SIZE	PART NO.	REV.
X	MTJG-4-88ARX1-FSM-PG	E

REF:	SCALE:	SHEET
S00005C	NTS	1 OF 1