Rev	AWO #	Description	Date	Appr
-		RELEASED	2/17/17	

APPROVED: _____

DATE: _____ TITLE: _____

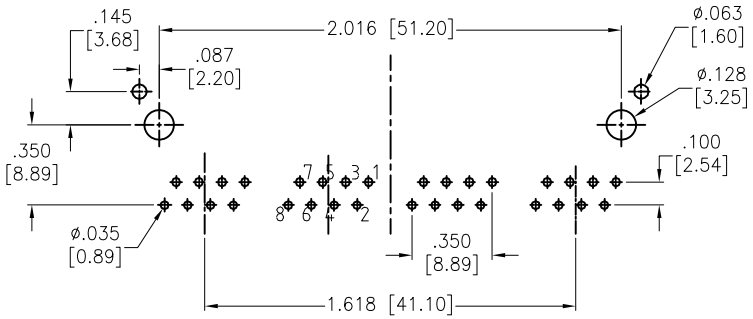

RECOMMENDED PCB LAYOUT

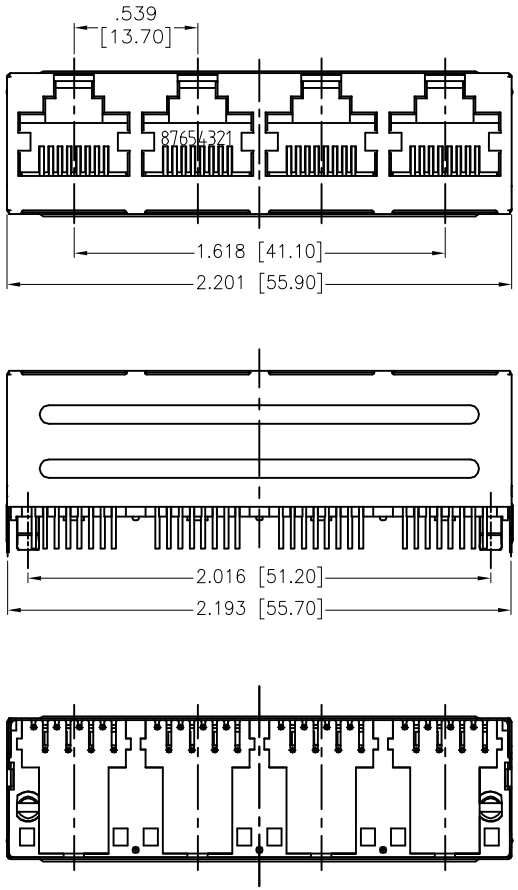

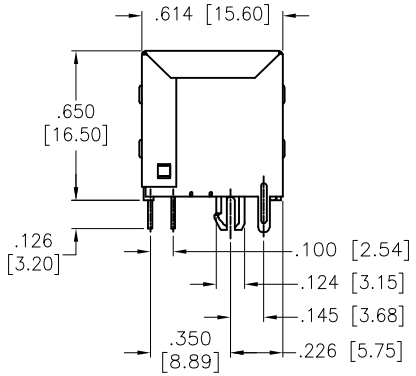

X	PLATING
0	15 µin Gold
1	30 µIn Gold
2	50 µin Gold
6	6 µin Gold

SPECIFICATIONS:

Material:

Housing: PBT, rated UL 94V–0, Color: Black

Contacts: Phosphor Bronze

Shield: Brass, Nickel plated

Plating:

Round contact

Gold over Nickel underplate overall

Flat contact

Gold over Nickel underplate on contact area,

Tin over Nickel underplate on solder tails

(See chart for thickness)

Electrical:

Operating voltage: 125 VAC RMS

Current rating: 1.5 Amps

Contact resistance: 20 mohms max

Insulation resistance: 1,000 Mohms min @ 500 VDC

Dielectric withstanding voltage: 1,000 VAC RMS for 1 minute (Contact to Contact)
1,500 VDC for 1 minute (Contact to Screen and test panel)

Temperature Rating:

Operating temperature: –40°C to +85°C

Environmental:

Lead free, RoHS compliant.

RoHS COMPLIANT

UNLESS OTHERWISE SPECIFIED
ALL DIMENSIONS ARE INCHES [MM]
TOLERANCES: EXCEPT AS NOTED

INCHES		HOLES	
.X	± .10	Ø.X	±.10
.XX	± .020	Ø.XX	±.015
.XXX	± .015	Ø.XXX	±.010

APPROVALS		DATE
DRAWN	HR	2/17/17
CHECKED	CH	2/17/17
APPROVED		

ADAM TECH
909 Rahway Avenue, Union, NJ 07083
Phone: 908-687-5000 Fax: 908-687-5710

TITLE

MODULAR GANGED JACK, 4 PORTS, 8P8C

SIZE	PART NO.	REV.
X	MTJG-4-88AYX1-FSB	-

REF: S00005C | SCALE: NTS | SHEET 1 OF 1