APPROVED: _____

DATE: _____ TITLE: _____

Rev	AWO #	Description	Date	Appr
-		RELEASED	5/02/05	
A		CORRECTED PEG SHAPE	5/09/05	
B		CORRECTED BOTTOM VIEW	5/10/05	BAS
C		UPDATED	12/15/06	SS
D		CORRECTED DIP LENGTH	10/23/07	
E		REVISED DIM.	5/23/08	
F		REDRAWN	11/10/11	
F		UPDATE SPEC.	8/30/18	AY/TW

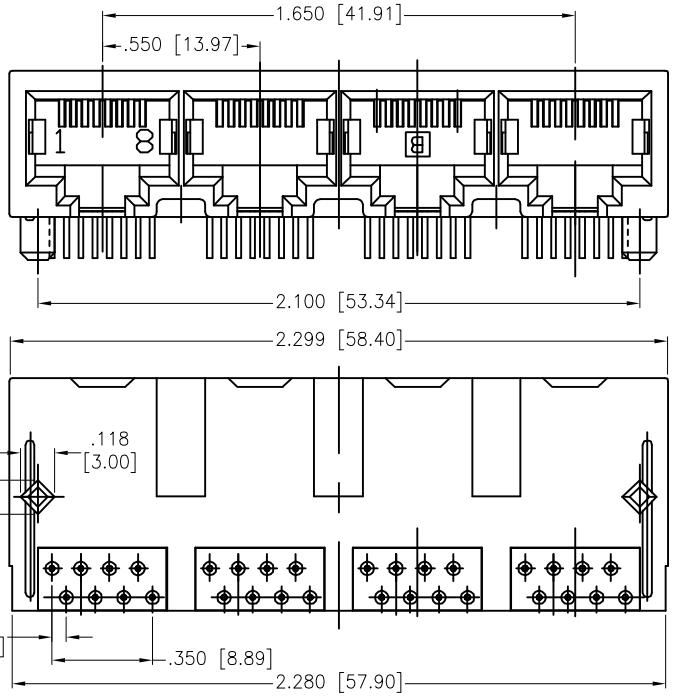

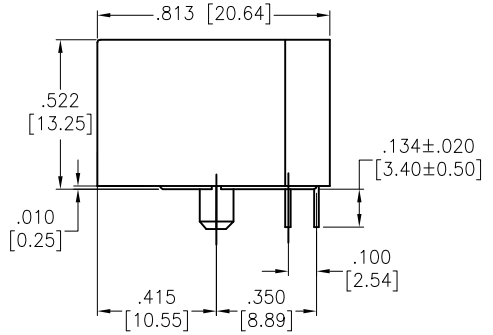

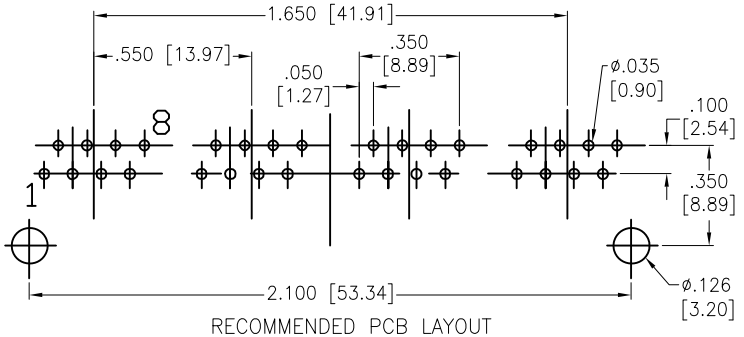

RECOMMENDED PCB LAYOUT

SPECIFICATIONS:

Material:

Insulator: PBT, rated UL 94V-0

Insulator color: Black

Contacts: Phosphor Bronze

Contact Plating:

Round contact

Gold over Nickel underplate overall

Flat contact

Gold over Nickel underplate on contact area

Tin over Nickel underplate on solder tails

Electrical:

Voltage rating: 125 VAC RMS

Current rating: 1.5 Amp

Contact Resistance: 35 mohms max

Insulation resistance: 1,000 Mohms min @ 500 VDC

Dielectric withstanding voltage: 1,000 VAC or 1,500 VDC for 1 minut

Temperature Rating:

Operating temperature: -40°C to +85°C

Environmental:

Lead free, RoHS compliant.

RoHS COMPLIANT

UNLESS OTHERWISE SPECIFIED
ALL DIMENSIONS ARE INCHES [MM]
TOLERANCES: EXCEPT AS NOTED

INCHES		HOLES	
.X	± .10	Ø.X	±.10
.XX	± .020	Ø.XX	±.015
.XXX	± .015	Ø.XXX	±.010

APPROVALS		DATE
DRAWN	SS	5/02/05
CHECKED		
APPROVED		

ADAM TECH INTERCONNECTS
909 Rahway Avenue,
Union, NJ 07083
Phone: 908-687-5000
Fax: 908-687-5710

TITLE: MODULAR TELEPHONE JACK, GANGED 8P8C, RIGHT ANGLE, PCB

SIZE	PART NO.	REV.
X	MTJG-4-88GX1	G

REF: S00005C | SCALE: NTS | SHEET 1 OF 1