APPROVED: _____

DATE: _____ TITLE: _____

Rev	AWO #	Description	Date	Appr
-		RELEASED	2/22/13	
A		UPDATE SPEC.	6/14/17	AY/NC

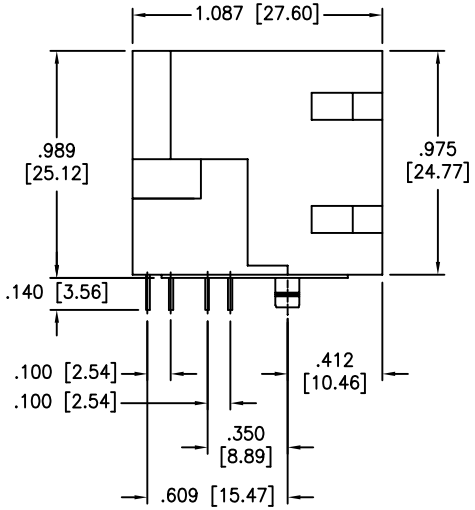

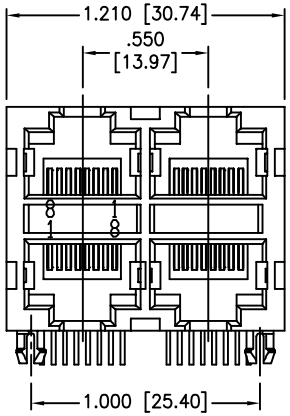

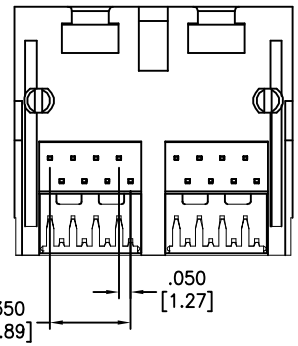

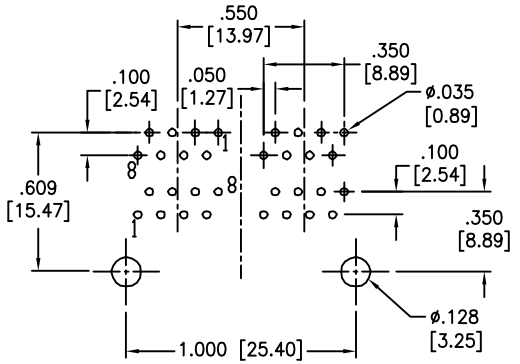

RECOMMENDED PCB LAYOUT

SPECIFICATIONS:
Material:
Insulator: PBT, rated UL 94V–0
Insulator color: Black
Contacts: Phosphor Bronze
Cantacts Plating:
Round contact
Gold over Nickel underplate overall
Flat contact
Gold over Nickel underplate on contact area,
Tin over Nickel underplate on solder tails
(See chart for thickness)
Electrical:
Voltage rating: 125 VAC rms
Current rating: 1.5 Amps max
Contact resistance: 20 mohms max
Insulation resistance: 1,000 Mohms min @ 500 VDC
Dielectric withstanding voltage: 1,000 VAC or 1,500 VDC for 1 minute
Temperature Rating:
Operating temperature: –40°C to +85°C
Environmental:
Lead free, RoHS compliant.

RoHS COMPLIANT

X	PLATING
0	15 µin Gold
1	30 µin Gold
2	50 µin Gold
6	6 µin Gold

UNLESS OTHERWISE SPECIFIED
ALL DIMENSIONS ARE INCHES [MM]
TOLERANCES: EXCEPT AS NOTED

INCHES		HOLES	
.X	± .10	Ø.X	±.10
.XX	± .020	Ø.XX	±.015
.XXX	± .015	Ø.XXX	±.010

APPROVALS		DATE
DRAWN	AY	2/22/13
CHECKED	AH	2/22/13
APPROVED		

ADAM TECH
909 Rahway Avenue, Union, NJ 07083
Phone: 908-687-5000 Fax: 908-687-5710

TITLE: 4 PORT GANGED STACKED JACK 8P8C

SIZE	PART NO.	REV.
X	MTJG-4-88JX1	A

REF: S00005C | SCALE: NTS | SHEET 1 OF 1