APPROVED: _____

DATE: _____ TITLE: _____

| Rev | AWO # | Description | Date | Appr |
|---|---|---|---|---|
| - | | RELEASED | 10/23/13 | |
| A | | UPDATE SPEC. | 9/26/16 | AY/AC |
| B | | UPDATED DRAWING | 7/19/23 | JJ/MC |

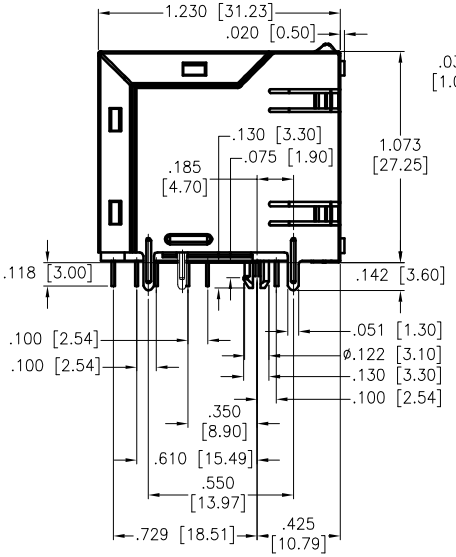


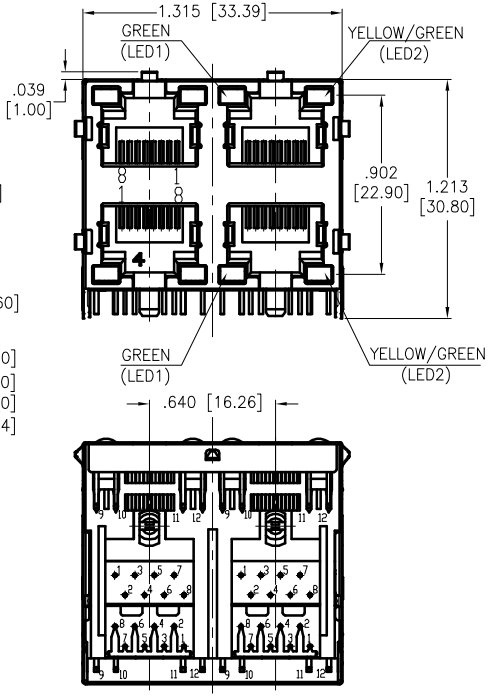


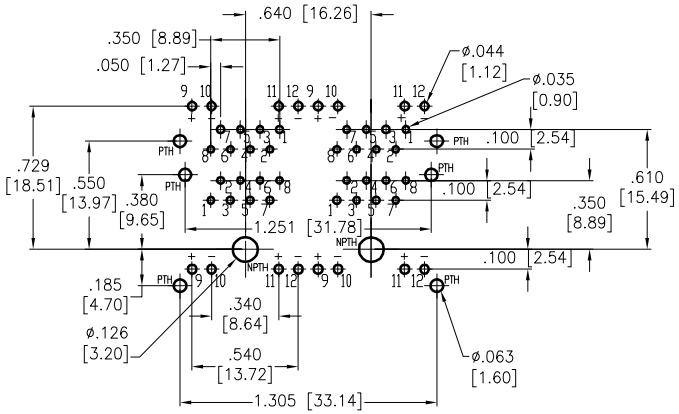


RECOMMENDED PCB LAYOUT

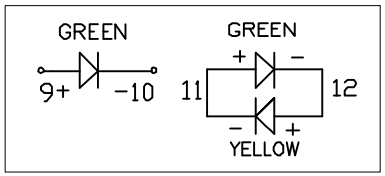


SPECIFICATIONS:

Material:

Insulator: PBT, glass reinforced, rated UL 94V-0

Insulator color: Black

Contacts: Phosphor Bronze

Shell: Brass, Nickel plated

Cantacts Plating:

Round contact

Gold over Nickel underplate overall

Flat contact

Gold over Nickel underplate on contact area,

Tin over Nickel underplate on solder tails

Electrical:

Voltage rating: 150 VAC rms

Current rating: 1.5 Amp

Contact Resistance: 20 mohms max

Insulation resistance: 1,000 Mohms min @ 500 VDC

Dielectric withstanding voltage:

Contact to Contact: 1,000 VDC or AC Peak for 1 minute

Contact to Screen and Test panel: 1,500 VDC or AC Peak for 1 minute

Temperature Rating:

Operating temperature: -40°C to +85°C

Environmental:

Lead free, RoHS compliant. RoHS COMPLIANT

UNLESS OTHERWISE SPECIFIED ALL DIMENSIONS ARE INCHES [MM]. TOLERANCES: EXCEPT AS NOTED

| INCHES | | HOLES | |
|---|---|---|---|
| .X | ± .10 | Ø.X | ±.10 |
| .XX | ± .020 | Ø.XX | ±.015 |
| .XXX | ± .015 | Ø.XXX | ±.010 |

| | | |
|---|---|---|
| DRAWN | AY | 10/23/13 |
| CHECKED | KW | 10/23/13 |
| APPROVED | | |

THIS DRAWING CONTAINS INFORMATION THAT IS PROPRIETARY AND SHOULD NOT BE USED WITHOUT PRIOR WRITTEN PERMISSION FROM ADAM TECH

ADAM TECH
909 Rahway Avenue,
Union, NJ 07083
Phone: 908-687-5000
Fax: 908-687-5710

TITLE: MODULAR JACK GANGED, 4 PORT, 8P8C W/ LED1 GREEN, LED2 YELLOW/GREEN

| SIZE | PART NO. | REV. |
|---|---|---|
| X | MTJG-4-88JX1-FS-PG-LV | B |

REF: S00005C | SCALE: NTS | SHEET 1 OF 1