APPROVED: _____

DATE: _____ TITLE: _____

Rev	AWO #	Description	Date	Appr
-		RELEASED	3/9/17	
A		ADDED PANEL CUT	2/21/19	2/21/19

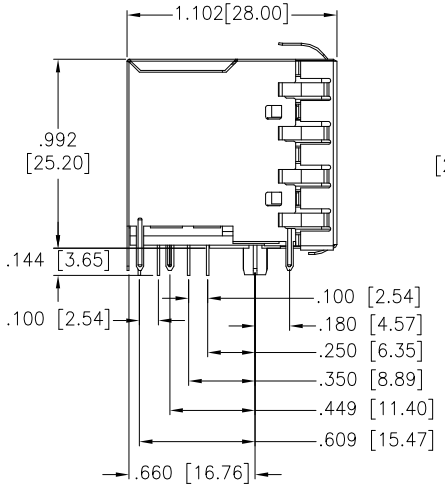

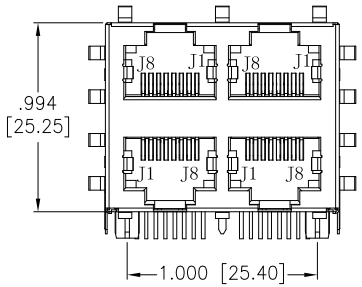

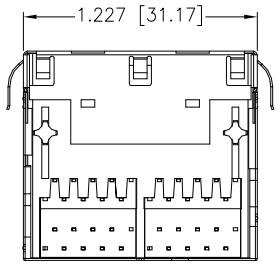

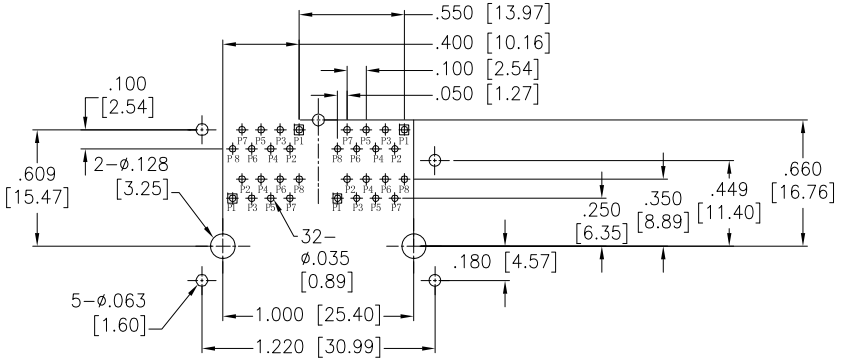

RECOMMENDED PCB LAYOUT

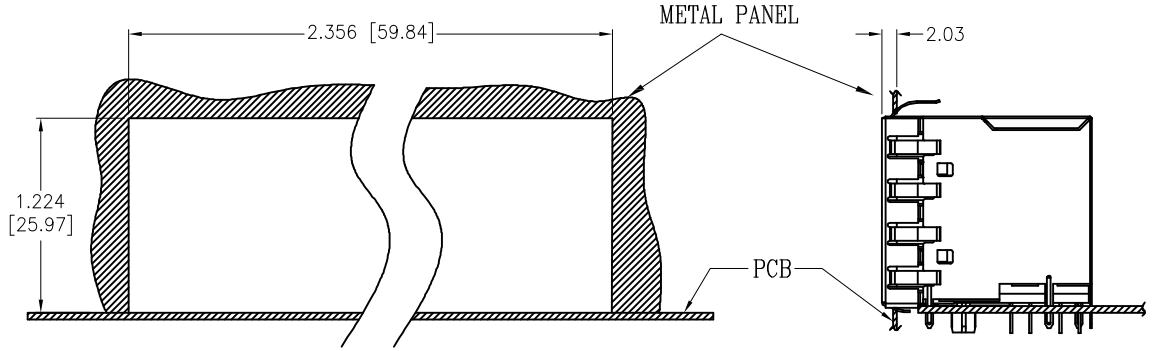

SPECIFICATIONS:
Material:
Housing: PA66, rated UL 94V–0, Color: Black
Inserter: PBT, rated UL 94V–0, Color: Black
Contacts: Copper Alloy
Shield: Brass, Nickel plated
Plating:
Round contact
Gold over Nickel underplate overall
Flat contact
Gold over Nickel underplate on contact area,
Tin over Nickel underplate on solder tails
(See chart for thickness)
Electrical:
Voltage rating: 150 VAC max
Contact Resistance: 20 mohms max
Insulation resistance: 500 Mohms min
Dielectric withstanding voltage: 1500VAC or 2250VDC for 1 minute
Temperature Rating:
Operating temperature: –40°C to +85°C
Environmental:
Lead free, RoHS compliant.

RoHS COMPLIANT

UNLESS OTHERWISE SPECIFIED
ALL DIMENSIONS ARE INCHES [MM]
TOLERANCES: EXCEPT AS NOTED

INCHES		HOLES	
.X	± .10	Ø.X	±.10
.XX	± .020	Ø.XX	±.015
.XXX	± .015	Ø.XXX	±.010

APPROVALS		DATE
DRAWN	AY	3/9/17
CHECKED	RT	3/9/17
APPROVED		

ADAM TECH INTERCONNECTS
909 Rahway Avenue,
Union, NJ 07083
Phone: 908-687-5000
Fax: 908-687-5710

TITLE

MODULAR JACK GANGED, 4 PORT, 8P8C

SIZE	PART NO.	REV.
X	MTJG-4-88JX1-FSG-PG-M5C	A

REF: S00005C | SCALE: NTS | SHEET 1 OF 2

Rev	AWO #	Description	Date	Appr
SEE SHT 1 OF 2 FOR REVISION				

APPROVED: _____

DATE: _____ TITLE: _____

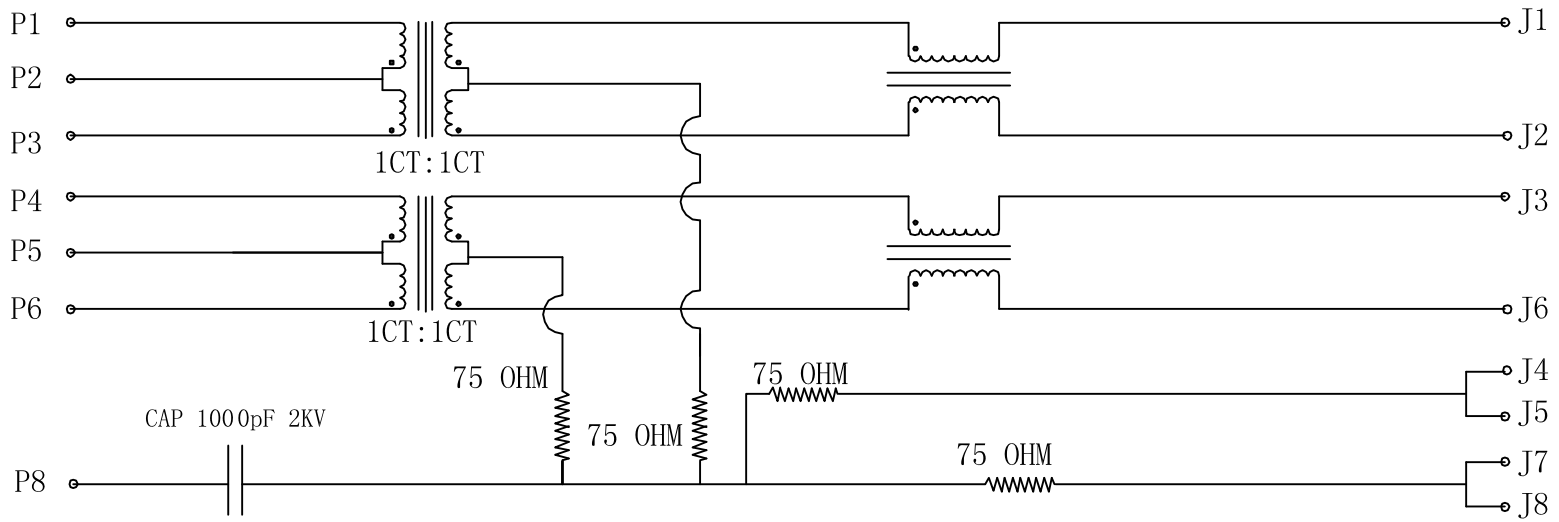

Electronical Specifications:

1. Turn Ratio @100KHz: (P1~P3):(J1~J2) = 1:1±5%
   (P4~P6):(J3~J6) = 1:1±5%
2. Primary Inductance: 350uH MIN @100KHZ,0.1V 8mA DC BIAS
3. DC Resistance:(J1~J2):(J3~J6) 1.2 OHMS MAX
4. Insertion Loss: 1-100MHz -1.2dB MAX
5. Return Loss: 1-30MHz -16dB MIN
   30-60MHz -12dB MIN
   60-80MHz -10dB MIN
6. CROSS TALK: 1-100MHz -30dB MIN
7. COMMON TO COMMON MODE ATTENUATION: 1-100MHz -30dB MIN
8. Isolation: PHY Side to Line Side: 1500VAC or 2250VDC

UNLESS OTHERWISE SPECIFIED
ALL DIMENSIONS ARE INCHES [MM]
TOLERANCES: EXCEPT AS NOTED

INCHES		HOLES	
.X	± .10	Ø.X	±.10
.XX	± .020	Ø.XX	±.015
.XXX	± .015	Ø.XXX	±.010

APPROVALS		DATE
DRAWN	AY	3/9/17
CHECKED	RT	3/9/17
APPROVED		

ADAM TECH INTERCONNECTS
909 Rahway Avenue,
Union, NJ 07083
Phone: 908-687-5000
Fax: 908-687-5710

TITLE

MODULAR JACK GANGED, 4 PORT, 8P8C

SIZE	PART NO.	REV.
X	MTJG-4-88JX1-FSG-PG-M5C	A

REF:	SCALE:	SHEET
S00005C	NTS	2 OF 2