| Rev | AWO # | Description | Date | Appr |
|---|---|---|---|---|
| - | | RELEASED | 9/14/15 | |

APPROVED: _____

DATE: _____ TITLE: _____

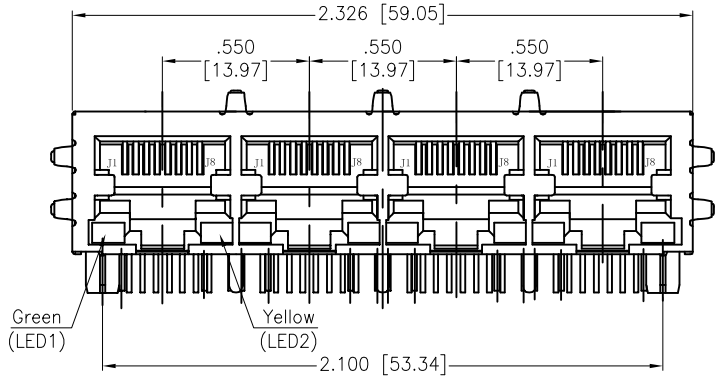


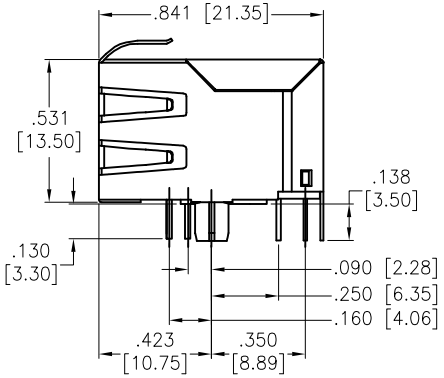


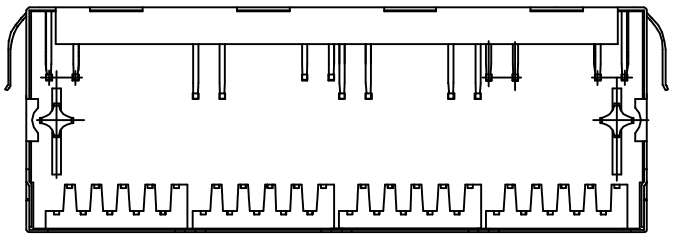

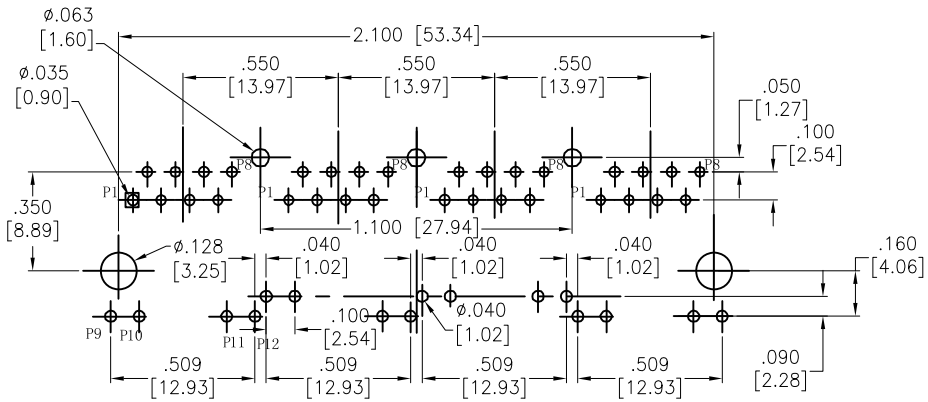


RECOMMENDED PCB LAYOUT

SPECIFICATIONS:
Material:
Insulator: Thermoplastic, rated UL 94V–0
Insulator color: Black
Contacts: Copper Alloy
Shield: Brass, Nickel plated
Plating:
Round contact
Gold over Nickel underplate overall
Flat contact
Gold over Nickel underplate on contact area,
Tin over Nickel underplate on solder tails
(See chart for thickness)
Electrical:
Operating voltage: 150 VAC max
Contact Resistance: 20 mohms max
Insulation resistance: 500 Mohms min
Dielectric withstanding voltage: 1500 VAC for 1 minute
Temperature Rating:
Operating temperature: 0°C to +70°C
Environmental:
Lead free, RoHS compliant.

RoHS COMPLIANT

| X | PLATING |
|---|---|
| 0 | 15 µin Gold |
| 1 | 30 µin Gold |
| 2 | 50 µin Gold |
| 6 | 6 µin Gold |

UNLESS OTHERWISE SPECIFIED
ALL DIMENSIONS ARE INCHES [MM]
TOLERANCES: EXCEPT AS NOTED

| INCHES | | HOLES | |
|---|---|---|---|
| .X | ± .10 | Ø.X | ±.10 |
| .XX | ± .020 | Ø.XX | ±.015 |
| .XXX | ± .015 | Ø.XXX | ±.010 |

| APPROVALS | | DATE |
|---|---|---|
| DRAWN | AY | 9/14/15 |
| CHECKED | MW | 9/14/15 |
| APPROVED | | |


**ADAM TECH**
909 Rahway Avenue, Union, NJ 07083
Phone: 908-687-5000 Fax: 908-687-5710


TITLE: MODULAR JACK GANGED, 4 PORT, 8P8C W/LED1 GREEN, LED2 YELLOW

| SIZE | PART NO. | REV. |
|---|---|---|
| X | MTJG-4-88TX1-FS-PG-LH-M5C | - |

REF: S00005C | SCALE: NTS | SHEET 1 OF 2

| Rev | AWO # | Description | Date | Appr |
|---|---|---|---|---|
| SEE SHT 1 OF 2 FOR REVISION | | | | |

APPROVED: _____

DATE: _____ TITLE: _____

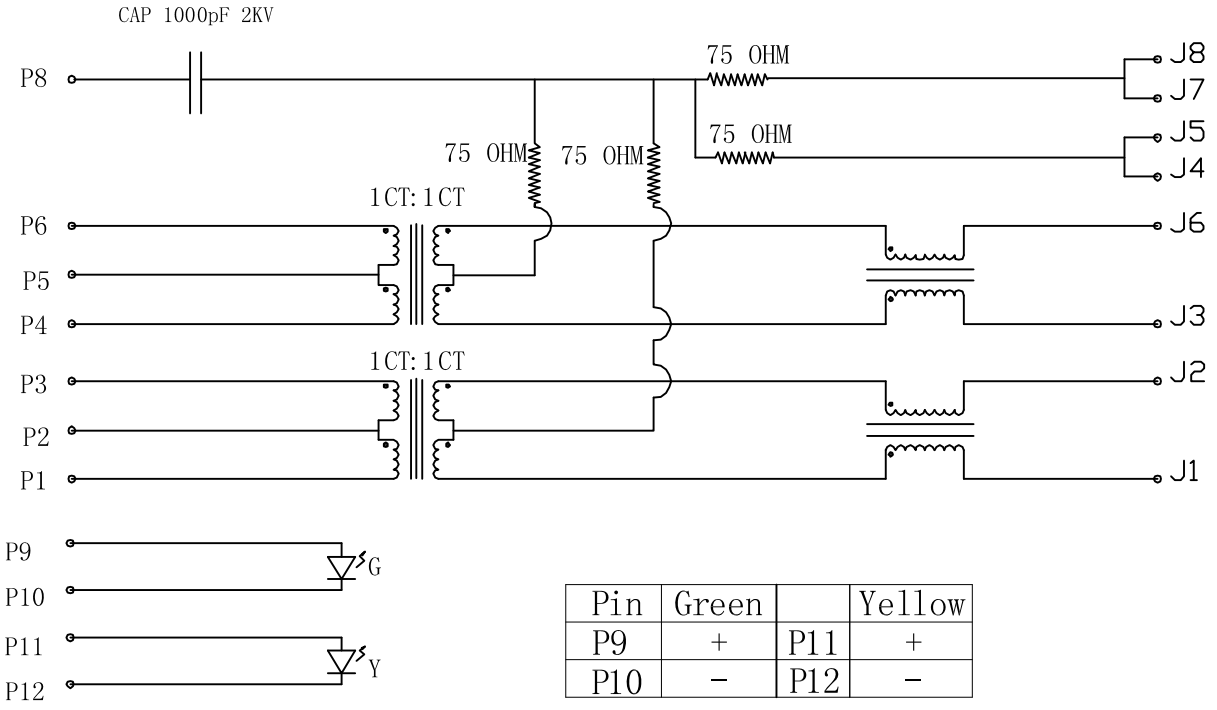


| Pin | Green | | Yellow |
|---|---|---|---|
| P9 | + | P11 | + |
| P10 | - | P12 | - |

ELECTRICAL SPECIFICATIONS:

1. Turns Ratio @100KHz: (P1 ~ P3) : (J1 ~ J2) 1:1 ±5%
   (P4 ~ P6) : (J3 ~ J6) 1:1 ±5%
2. Primary Inductance: 350uH min @100KHz ,0.1V 8mA DC Bias
3. DC Resistance: (J1 ~ J2) : (J3 ~ J6): 1.2 Ohms Max.
4. Insertion Loss: 1~100MHZ : -1.2dB Max.
5. Return Loss: 1~30MHZ: -16dB Min.
   30~60MHZ: : -12dB Min.
   60~80MHZ: -10dB Min.
6. Cross Talk: 1~100MHZ: -30dB Min.
7. Common to Common mode Attenuation: 1~100MHZ: -30dB Min.
8. Isolation: PHY Side to Line Side : 1500VAC or 2250VDC

UNLESS OTHERWISE SPECIFIED
ALL DIMENSIONS ARE INCHES [MM]
TOLERANCES: EXCEPT AS NOTED

| INCHES | | HOLES | |
|---|---|---|---|
| .X | ± .10 | Ø.X | ±.10 |
| .XX | ± .020 | Ø.XX | ±.015 |
| .XXX | ± .015 | Ø.XXX | ±.010 |

| APPROVALS | | DATE |
|---|---|---|
| DRAWN | AY | 9/14/15 |
| CHECKED | MW | 9/14/15 |
| APPROVED | | |


**ADAM TECH**
909 Rahway Avenue, Union, NJ 07083
Phone: 908-687-5000 Fax: 908-687-5710


TITLE: MODULAR JACK GANGED, 4 PORT, 8P8C W/LED1 GREEN, LED2 YELLW

| SIZE | PART NO. | REV. |
|---|---|---|
| X | MTJG-4-88TX1-FS-PG-LH-M5C | - |

REF: S00005C | SCALE: NTS | SHEET 2 OF 2