Rev	AWO #	Description	Date	Appr
-		RELEASED	04/19/05	
A		UPDATE DRAWING	12/10/14	HR/LL

APPROVED: _____

DATE: _____ TITLE: _____

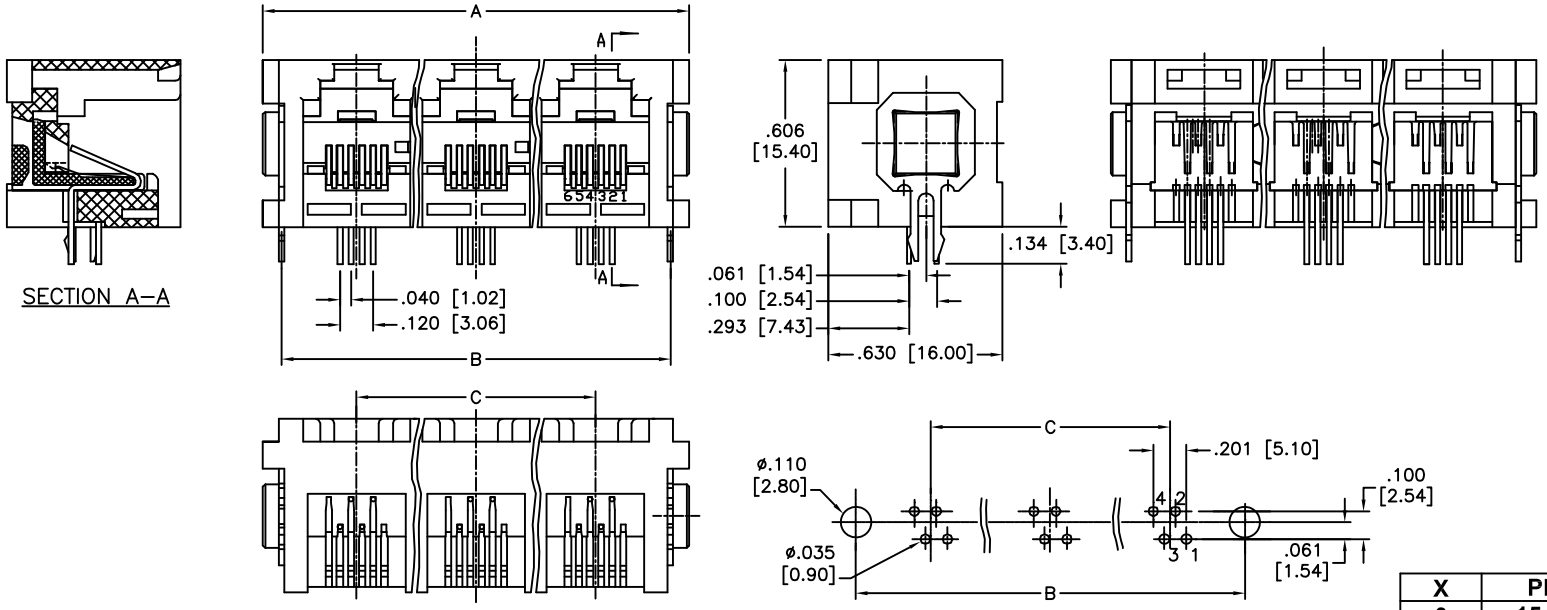

SECTION A–A

RECOMMENDED PCB LAYOUT

X	PLATING
0	15 µin Gold
1	30 µin Gold
2	50 µin Gold

DIMENSION	No. of Ports								
	2	3	4	5	6	7	8	9	10
A	1.110 [28.20]	1.543 [39.20]	1.976 [50.20]	2.410 [61.20]	2.842 [72.20]	3.275 [83.20]	3.710 [94.20]	4.142 [105.20]	4.575 [116.20]
B	.976 [24.80]	1.409 [35.80]	1.843 [46.80]	2.276 [57.80]	2.709 [68.80]	3.142 [79.80]	3.575 [90.80]	4.008 [101.80]	4.441 [112.80]
C	.433 [11.00]	.886 [22.00]	1.299 [33.00]	1.732 [44.00]	2.165 [55.00]	2.598 [66.00]	3.030 [77.00]	3.465 [88.00]	3.898 [99.00]

SPECIFICATIONS:

Material:

Insulator: PBT, rated UL 94V–0

Insulator color: Gray

Contacts: Phosphor Bronze

Plating:

Gold over Nickel underplate on contact area,
Tin over Copper underplate on PCB tails

Electrical:

Operating voltage: 125 VAC max

Current rating: 1.5 Amps max

Contact resistance: 35 mohms max

Insulation resistance: 1000 Mohms min @ 500 VDC

Dielectric withstanding voltage: 1000 VAC for 1 minute

Temperature Rating:

Operating temperature: 0°C to +70°C

Environmental:

Lead free, RoHS Compliant

RoHS COMPLIANT

UNLESS OTHERWISE SPECIFIED
ALL DIMENSIONS ARE INCHES [MM]
TOLERANCES: EXCEPT AS NOTED

INCHES		HOLES	
.X	± .10	Ø.X	±.10
.XX	± .020	Ø.XX	±.015
.XXX	± .015	Ø.XXX	±.010

APPROVALS		DATE
DRAWN	SS	04/19/05
CHECKED		
APPROVED		

ADAM TECH
909 Rahway Avenue, Union, NJ 07083
Phone: 908-687-5000 Fax: 908-687-5710

TITLE: GANGED MODULAR TELEPHONE JACK, 6P4C RIGHT ANGLE, PCB

SIZE	PART NO.	REV.
X	MTJG-X-647HX2	A

REF: S00005C | SCALE: NTS | SHEET 1 OF 1