Rev	AWO #	Description	Date	Appr
-		RELEASED	6/23/15	
A		REVISED DIM.	7/24/15	AY
B		UPDATE CURRENT RATING	8/8/16	AY/NP
C		UPDATE DRAWING	3/30/21	LH/LW

APPROVED: _____

DATE: _____ TITLE: _____

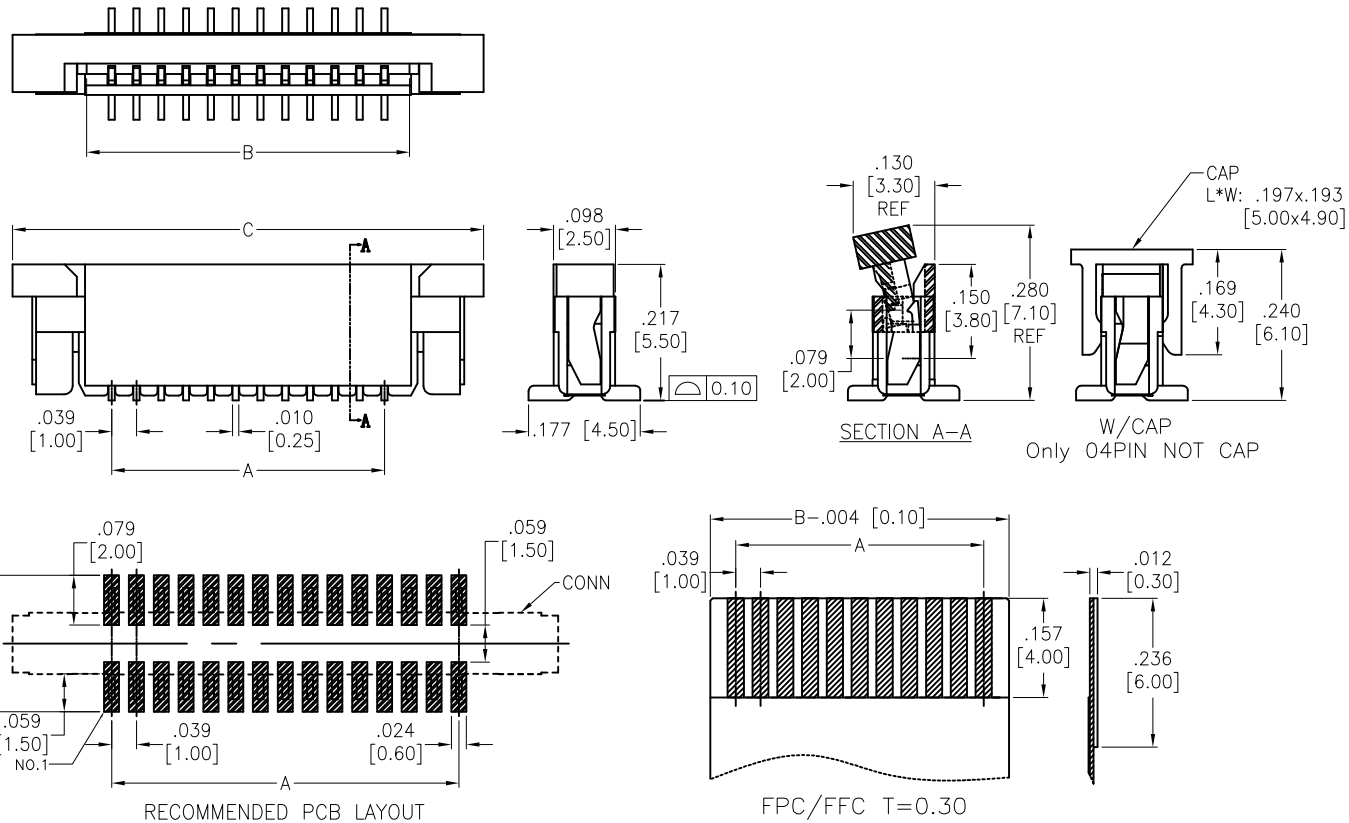

SPECIFICATIONS:
Material:
Insulator: Hi–temp thermoplastic, rated UL 94V–0
Insulator color: Natural
Actuator: Hi–temp thermoplastic, rated UL 94V–0, Color: Black
Contacts: Copper Alloy
Holddown: Copper Alloy, Tin plated
Plating:
Tin over Nickel underplate overall
Electrical:
Current rating: 0.5A max
Contact resistance: 40 mohms max
Insulation resistance: 500 Mohms min
Dielectric withstanding voltage: 200 VAC min
Temperature Rating:
–25°C to +85°C
Environmental:
Lead free, RoHS compliant RoHS COMPLIANT

Positions: 04 thru 32
A= .039 [1.00] x No. of Spaces
B= .039 [1.00] x No. of Spaces + .083 [2.10]
C= .039 [1.00] x No. of Spaces + .315 [8.00]

UNLESS OTHERWISE SPECIFIED
ALL DIMENSIONS ARE INCHES [MM]
TOLERANCES: EXCEPT AS NOTED

INCHES		HOLES	
.X	± .10	Ø.X	±.10
.XX	± .020	Ø.XX	±.015
.XXX	± .015	Ø.XXX	±.010

APPROVALS		DATE
DRAWN	HR	6/23/15
CHECKED	NC	6/23/15
APPROVED		

ADAM TECH
909 Rahway Avenue,
Union, NJ 07083
Phone: 908-687-5000
Fax: 908-687-5710

TITLE: ZIF FLEX CIRCUIT CONNECTOR, SMT TYPE, TOP ENTRY

SIZE	PART NO.	REV.
X	PCA-2-CA-XX-V-3	C

REF: S00165C | SCALE: NTS | SHEET 1 OF 1