APPROVED: _____

DATE: _____ TITLE: _____

Rev	AWO #	Description	Date	Appr
-		RELEASED	6/22/15	
A		UPDATED SPEC.	9/25/15	HR/YC

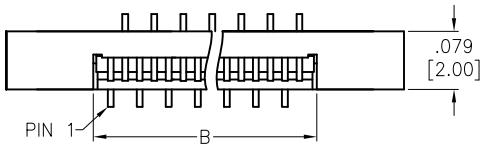

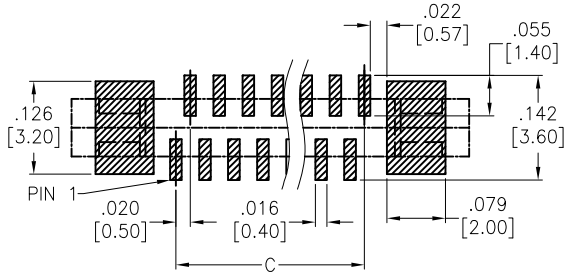

RECOMMENDED PCB LAYOUT

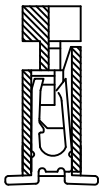

SECTION A–A

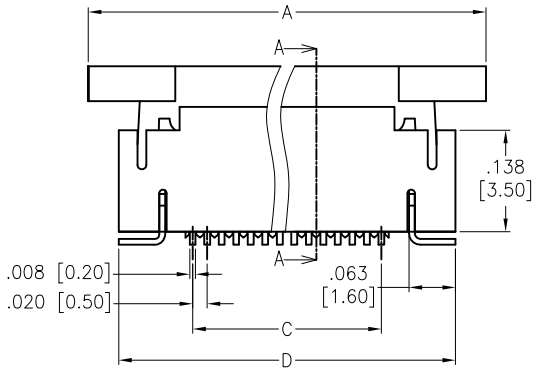

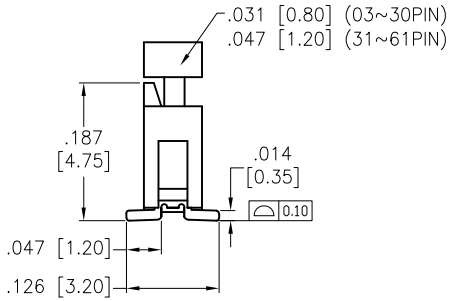

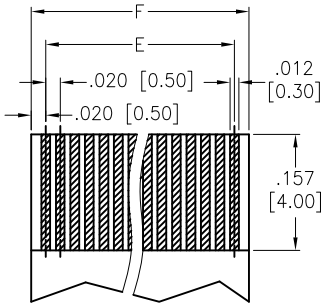

FPC/FFC T=.012±.001 [0.30±0.03]

SPECIFICATIONS:

Material:

Insulator: Hi–temp thermoplastic, rated UL 94V–0

Insulator color: Natural

Actuator: Hi–temp thermoplastic, rated UL 94V–0, Color: Black

Contacts: Phosphor Bronze

Contact: Phosphor Bronze

Hold Down: Brass, Tin plated

Plating:

Tin over Copper underplate overall

Electrical:

Current rating: 0.5 Amps max

Contact resistance: 30 mohms max

Insulation resistance: 100 Mohms min

Dielectric withstanding voltage: 250 VAC for 1 minute

Temperature Rating:

Operating temperature: –25°C to +85°C

Environmetal:

Lead free, RoHS compliant.

RoHS COMPLIANT

Positions: 03 thru 61

A = .020 [0.50] x No. of Space + .283 [7.20]

B = .020 [0.50] x No. of Space + .047 [1.20]

C = .020 [0.50] x No. of Space

D = .020 [0.50] x No. of Space + .201 [5.10]

E = .020 [0.50] x (No. of Positions per Row – 1)

F = .020 [0.50] x (No. of Positions per Row + 1)

UNLESS OTHERWISE SPECIFIED
ALL DIMENSIONS ARE INCHES [MM]
TOLERANCES: EXCEPT AS NOTED

INCHES		HOLES	
.X	± .10	Ø.X	±.10
.XX	± .020	Ø.XX	±.015
.XXX	± .015	Ø.XXX	±.010

APPROVALS		DATE
DRAWN	HR	6/22/15
CHECKED	AY1	6/22/15
APPROVED		

ADAM TECH

909 Rahway Avenue, Union, NJ 07083

Phone: 908-687-5000 Fax: 908-687-5710

TITLE: ZIF FLEX CIRCUIT CONNECTOR, 0.50 MM PITCH, TOP ENTRY, SMT TYPE

SIZE	PART NO.	REV.
X	PCA-6-LA-XX-V-3	A

REF: S00165C | SCALE: NTS | SHEET 1 OF 1