APPROVED: _____

DATE: _____ TITLE: _____

Rev	AWO #	Description	Date	Appr
-		RELEASED	02/09/07	
A		ADDED COPLANARITY SPEC	12/24/08	BAS
B		ADDED SHEET 2	3/17/11	SS

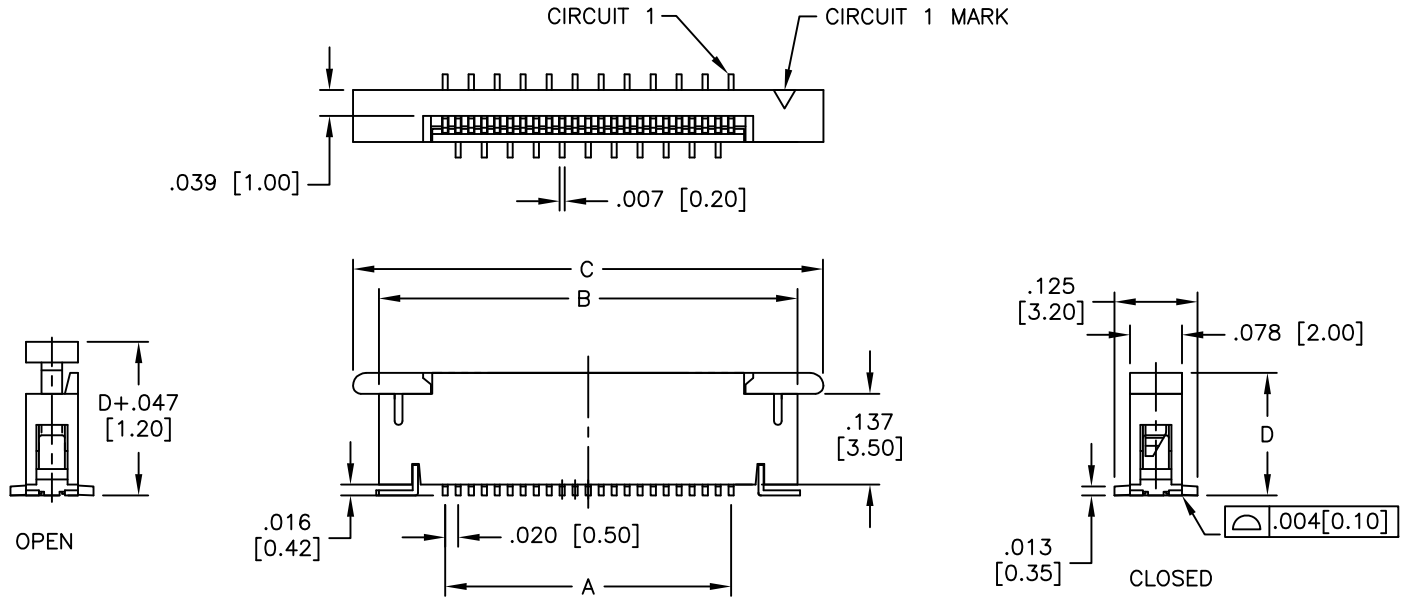

SPECIFICATIONS:
Material:
Insulator: Hi-temp thermoplastic, rated UL 94V-0
Insulator color: Natural
Contacts: Phosphor Bronze
Plating:
Tin over Copper underplate overall
Electrical:
Operating voltage: 100 VAC max
Current rating: 0.4 Amps max
Contact resistance: 30 mohms max initial
Insulation resistance: 500 Mohms min
Dielectric withstanding voltage: 500 VAC for 1 minute
Temperature Rating:
Operating temperature: -40°C to +85°C
Environmental:
Lead free, RoHS compliant RoHS COMPLIANT

Positions: 4 thru 60
A = .020 [0.50] x No. of Spaces
B = A + .200 [5.10]
C = A + .279 [7.10]
D = (4-30=.197 [5.00]) (31-60=.213 [5.40])

UNLESS OTHERWISE SPECIFIED
ALL DIMENSIONS ARE INCHES [MM]
TOLERANCES: EXCEPT AS NOTED

INCHES		HOLES	
.X	± .10	Ø.X	±.10
.XX	± .020	Ø.XX	±.015
.XXX	± .015	Ø.XXX	±.010

APPROVALS		DATE
DRAWN	BW	02/09/07
CHECKED		
APPROVED		

ADAM TECH
909 Rahway Avenue, Union, NJ 07083
Phone: 908-687-5000 Fax: 908-687-5710

TITLE: ZIF FLEX CIRCUIT CONNECTOR
TOP ENTRY, SMT

SIZE	PART NO.	REV.
X	PCA-6-XX-V-3	B

REF: | SCALE: NTS | SHEET 1 OF 2

Rev	AWO #	Description	Date	Appr
SEE SHEET 1 OF 2 FOR REVISION				

APPROVED: _____

DATE: _____ TITLE: _____

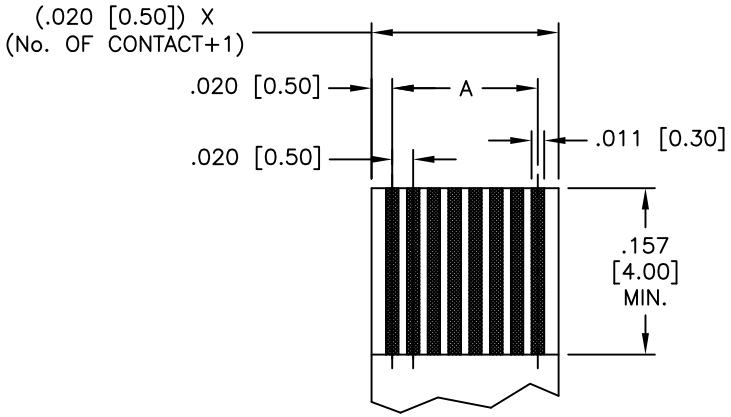

FFC / FPC DIMENSION
THICKNESS .011 [0.30]

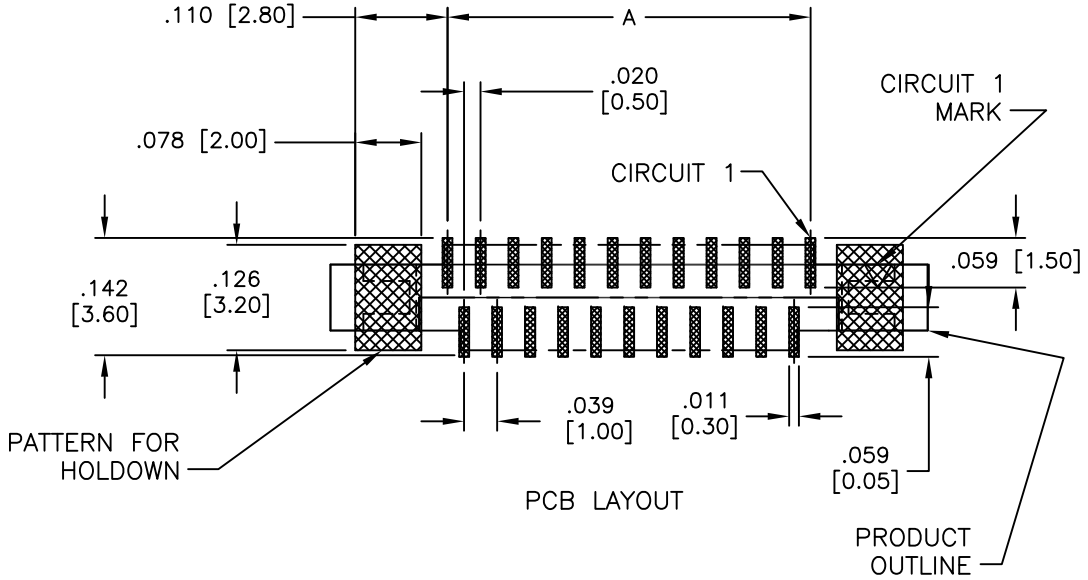

PCB LAYOUT

SPECIFICATIONS:
Material:
Insulator: Hi–temp thermoplastic, rated UL 94V–0
Insulator color: Natural
Contacts: Phosphor Bronze
Plating:
Tin over Copper underplate overall
Electrical:
Operating voltage: 100 VAC max
Current rating: 0.4 Amps max
Contact resistance: 30 mohms max initial
Insulation resistance: 500 Mohms min
Dielectric withstanding voltage: 500 VAC for 1 minute
Temperature Rating:
Operating temperature: –40°C to +85°C
Environmental:
Lead free, RoHS compliant RoHS COMPLIANT

Positions: 4 thru 60
A = .020 [0.50] x No. of Spaces

UNLESS OTHERWISE SPECIFIED
ALL DIMENSIONS ARE INCHES [MM]
TOLERANCES: EXCEPT AS NOTED

INCHES		HOLES	
.X	± .10	Ø.X	±.10
.XX	± .020	Ø.XX	±.015
.XXX	± .015	Ø.XXX	±.010

APPROVALS		DATE
DRAWN	BW	02/09/07
CHECKED		
APPROVED		

ADAM TECH
909 Rahway Avenue, Union, NJ 07083
Phone: 908-687-5000 Fax: 908-687-5710

TITLE: ZIF FLEX CIRCUIT CONNECTOR
TOP ENTRY, SMT

SIZE	PART NO.	REV.
X	PCA-6-XX-V-3	B

REF:	SCALE: NTS	SHEET 2 OF 2