Rev	AWO #	Description	Date	Appr
-		RELEASED	12/14/16	

APPROVED: _____

DATE: _____ TITLE: _____

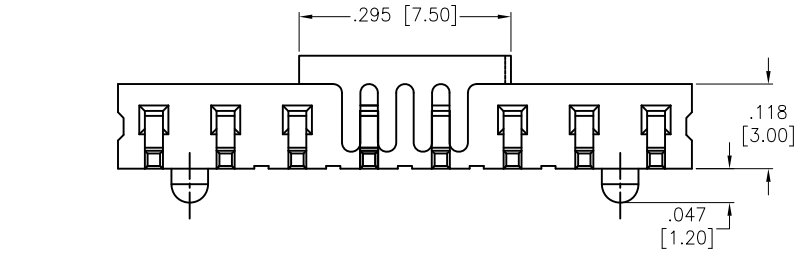

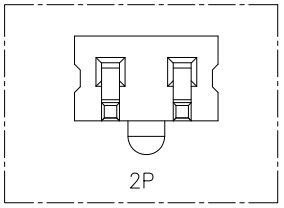

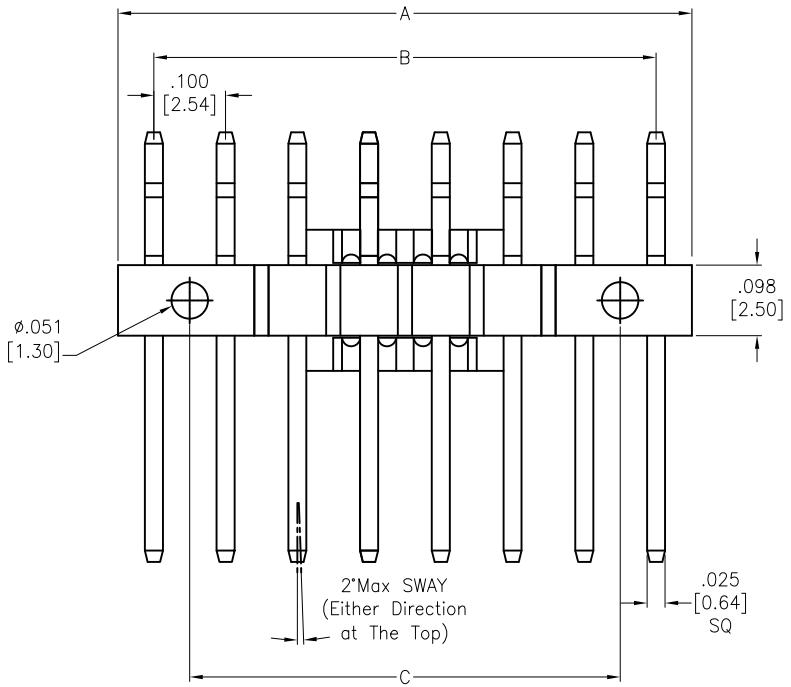

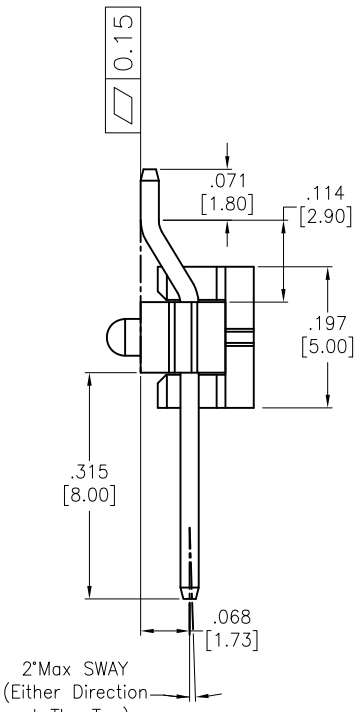

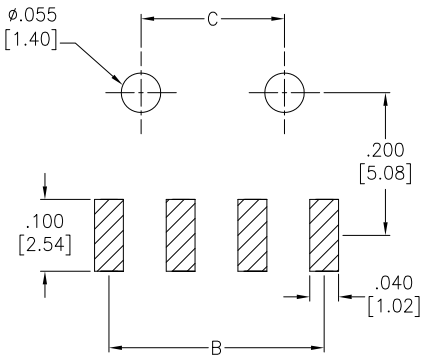

RECOMMENDED PCB LAYOUT

PACKAGED ON TAPE & REEL

Positions: 02 thru 30

A = .100 [2.54] X No. of Positions

B = .100 [2.54] x No. of Spaces

C = .100 [2.54] x No. of (Spaces−1)

SPECIFICATIONS:

Material:

Insulator: Hi−temp thermoplastic, rated UL 94V−0

Insulator color: Black

Contacts: Brass

Plating:

Gold flash over Nickel underplate overall

Electrical:

Current rating: 3 A

Contact resistance: 20 mohms max

Insulation resistance: 1,000 Mohms min

Dielectric withstanding voltage: 600 VAC

Temperature Rating:

Operating temperature: −40°C to +105°C

Environmental:

Lead free, RoHS compliant

RoHS COMPLIANT

UNLESS OTHERWISE SPECIFIED
ALL DIMENSIONS ARE INCHES [MM]
TOLERANCES: EXCEPT AS NOTED

INCHES		HOLES	
.X	± .10	Ø.X	±.10
.XX	± .020	Ø.XX	±.015
.XXX	± .015	Ø.XXX	±.010

APPROVALS		DATE
DRAWN	AY	12/14/16
CHECKED	MW	12/14/16
APPROVED		

ADAM TECH
909 Rahway Avenue, Union, NJ 07083
Phone: 908-687-5000 Fax: 908-687-5710

TITLE: SINGLE ROW RIGHT ANGLE, LOW PROFILE SMT, WITH PEG, GOLD PLATED

SIZE	PART NO.	REV.
X	PH1RB-XX-UB-SMT-P-PP-T/R	-

REF: S00032T | SCALE: NTS | SHEET 1 OF 1