Rev	AWO #	Description	Date	Appr
-		RELEASED	6/25/21	

APPROVED: _____

DATE: _____ TITLE: _____

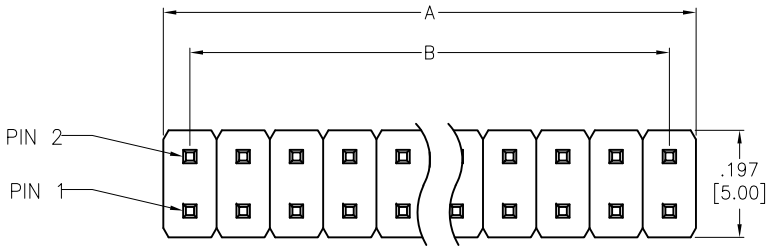

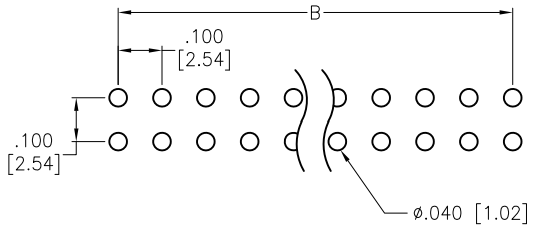

RECOMMENDED PCB LAYOUT

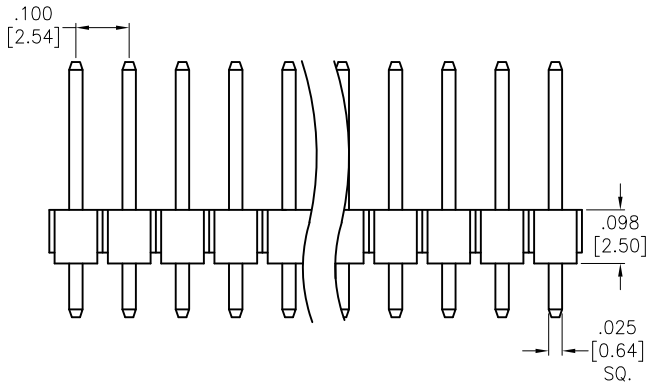

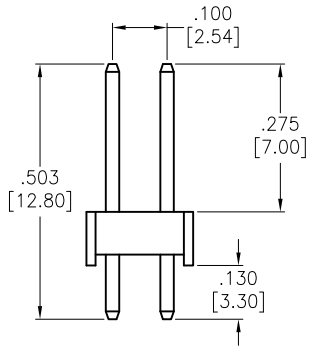

SPECIFICATIONS:
Material:
Insulator: Hi-temp thermoplastic, rated UL 94V-0
Insulator color: Black
Contacts: Brass
Plating:
15u" Gold on mating area, Tin on solder tails,
over Nickel underplate overall
Electrical:
Current rating: 3 Amps max
Contact resistance: 20 mohms max
Insulation resistance: 5,000 Mohms min @ 500 VDC
Temperature Rating:
Operating temperature: -40°C to +105°C
Environmental:
Lead free, RoHS compliant

RoHS COMPLIANT

Positions: 02 thru 06
A = .100 [2.54] x No. of Positions per Row
B = .100 [2.54] x No. of Spaces

UNLESS OTHERWISE SPECIFIED ALL DIMENSIONS ARE INCHES [MM]. TOLERANCES: EXCEPT AS NOTED

INCHES		HOLES	
.X	± .10	Ø.X	±.10
.XX	± .020	Ø.XX	±.015
.XXX	± .015	Ø.XXX	±.010

DRAWN	JJ	6/25/21
CHECKED	LW	6/25/21
APPROVED		

THIS DRAWING CONTAINS INFORMATION THAT IS PROPRIETARY AND SHOULD NOT BE USED WITHOUT PRIOR WRITTEN PERMISSION FROM ADAM TECH

ADAM TECH
909 Rahway Avenue,
Union, NJ 07083
Phone: 908-687-5000
Fax: 908-687-5710

TITLE: .100 [2.54] DUAL ROW PIN HEADER
15u" SG GOLD PLATED, HI-TEMP

SIZE	PART NO.	REV.
X	PH2-XX-SG-.130/.503-15-HT	-

REF: S00059T | SCALE: NTS | SHEET 1 OF 1