APPROVED: _____

DATE: _____ TITLE: _____

Rev	AWO #	Description	Date	Appr
-		RELEASED	6/26/06	
A		REVISED AND REDRAWN	6/6/07	
B		UPDATED DRAWING	1/17/19	HR/RC1

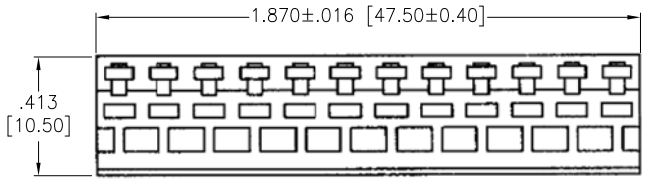

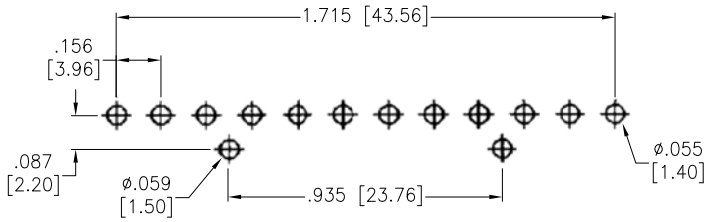

RECOMMENDED PCB LAYOUT

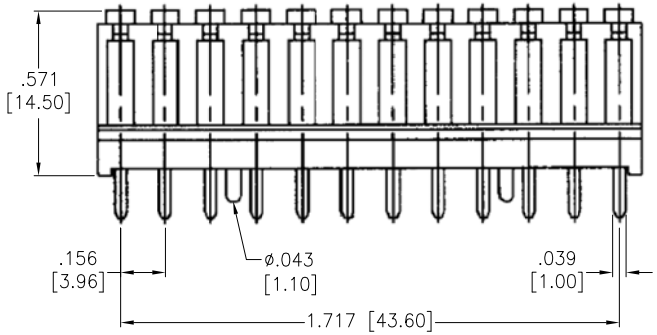

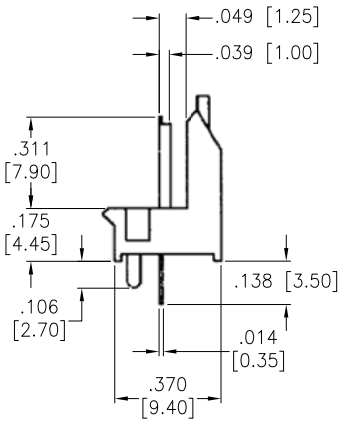

SPECIFICATIONS:
Material:
Insulator: Nylon66, rated UL 94V-2
Insulator color: White
Contacts: Brass
Plating:
Tin over Copper underplate overall
Electrical:
Voltage rating: 250 VAC/DC
Current rating: 7 A AC/DC
Insulation resistance: 1,000 Mohms min
Dielectric withstanding voltage: 1,500 VAC for 1 minute
Temperature Rating:
-25°C to +105°C
Environmental:
Lead free, RoHS compliant.

RoHS COMPLIANT

UNLESS OTHERWISE SPECIFIED
ALL DIMENSIONS ARE INCHES [MM]
TOLERANCES: EXCEPT AS NOTED

INCHES		HOLES	
.X	± .10	Ø.X	±.10
.XX	± .020	Ø.XX	±.015
.XXX	± .015	Ø.XXX	±.010

APPROVALS		DATE
DRAWN	SS	6/26/06
CHECKED		
APPROVED		

ADAM TECH INTERCONNECTS
909 Rahway Avenue,
Union, NJ 07083
Phone: 908-687-5000
Fax: 908-687-5710

TITLE: POWER LATCH HEADER, 12 PIN, STRAIGHT, PCB MOUNT

SIZE	PART NO.	REV.
X	PLHB-12-TS	B

REF:	SCALE:	SHEET
S00016T	NTS	1 OF 1