APPROVED: _____

DATE: _____ TITLE: _____

Rev	AWO #	Description	Date	Appr
-		RELEASED	7/13/18	
A		UPDATE SPEC.	9/27/18	AY/KC
B		UPDATE SPEC.	2/14/22	JJ/NL

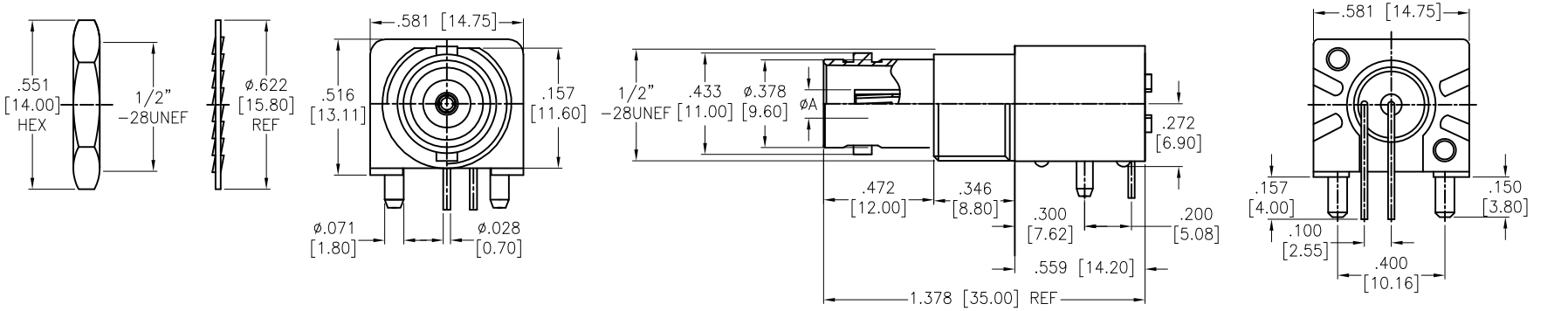

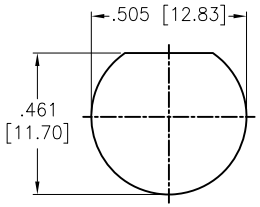

RECOMMENDED MOUNTING HOLE

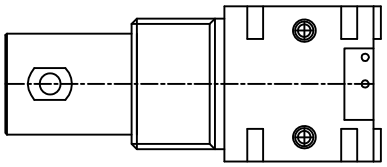

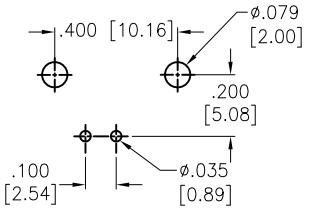

RECOMMENDED PCB HOLE

FIXTURE	BRASS	TIN
CONTACT WIRE	BRASS	TIN
CONTACT WIRE	BRASS	TIN
HOUSING	PBT	BLACK
INSULATION	PP	NATURAL
CONTACT PIN	BERYLLIUM COPPER	GOLD
INSULATION	POM	NATURAL
BODY	ZINC	NICKEL
WASHER	IRON	NICKEL
NUT	ZINC	NICKEL
DESCRIPTION	MATERIAL	FINISH

ADAM P/N	DIM. øA	IMPEDANCE
RF1-01K-D-00-50-BK-HDW-A	ø.181 [4.60]	50 ohm
RF1-01K-D-00-75-BK-HDW-A	ø.118 [3.00]	75 ohm

SPECIFICATIONS

Electrical

Nominal Impedance: 50/75 OHM (±5 OHM)
Frequency Range: 0~4 GHz
Working Voltage: 500 Vrms
Contact resistance: Outer Contact: 1.0 MEG OHM
Center Contact: 1.5 MEG OHM
Insulation Resistance: > 5000 MEG OHM
Dielectric Withstanding Voltage: 1500 Vrms.
Temperature Rating:
-65°C to +160°C
Environmental:
Lead free, RoHS compliant.

RoHS COMPLIANT

UNLESS OTHERWISE SPECIFIED ALL DIMENSIONS ARE INCHES [MM]. TOLERANCES: EXCEPT AS NOTED

INCHES		HOLES	
.X	± .10	Ø.X	±.10
.XX	± .020	Ø.XX	±.015
.XXX	± .015	Ø.XXX	±.010

DRAWN	AY	7/13/18
CHECKED	KC	7/13/18
APPROVED		

THIS DRAWING CONTAINS INFORMATION THAT IS PROPRIETARY AND SHOULD NOT BE USED WITHOUT PRIOR WRITTEN PERMISSION FROM ADAM TECH

ADAM TECH
909 Rahway Avenue,
Union, NJ 07083
Phone: 908-687-5000
Fax: 908-687-5710

TITLE
RF CONNECTOR, TYPE BNC, RIGHT ANGLE, PCB
50 or 75 OHM, BERYLLIUM COPPER CONTACT PIN

SIZE	PART NO.	REV.
X	RF1-01K-D-00-XX-BK-HDW-A	B

REF:	SCALE:	SHEET
S00277T	NTS	1 OF 1