Rev	AWO #	Description	Date	Appr
-		RELEASED	8/24/18	

APPROVED: _____

DATE: _____ TITLE: _____

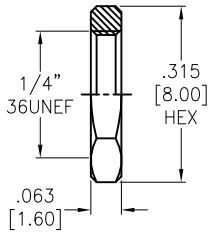

NUT

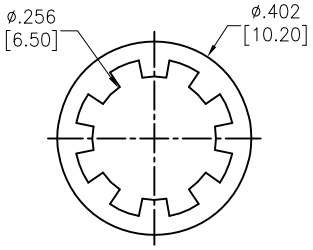

WASHER
.020 [0.50] Thickness

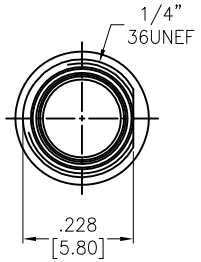

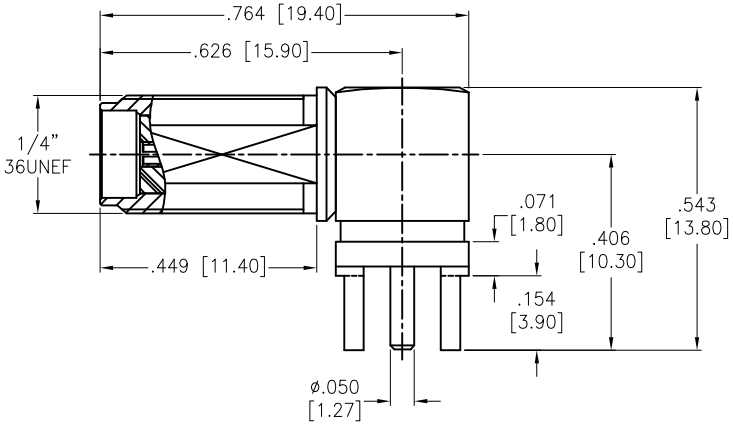

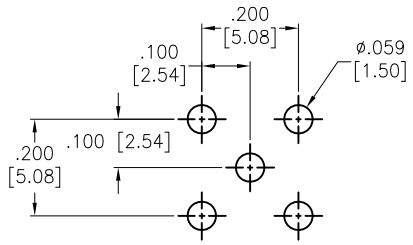

RECOMMENDED PCB LAYOUT

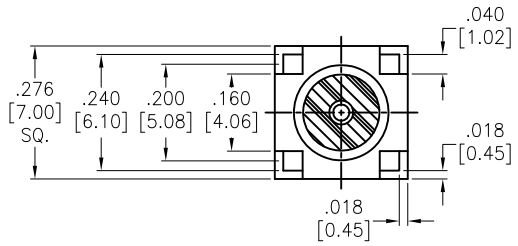

NUT	BRASS	GOLD
WASHER	BRASS	GOLD
INSULATOR	TEFLON	
BODY	BRASS	GOLD
CENTER PIN	PHOSPHOR BRONZE	GOLD
INSULATOR	TEFLON	
BODY	BRASS	GOLD
PART NAME	MATERIAL	FINISH

SPECIFICATIONS:
Temperature Rating: −40°C to +85°C
PTFE Temperature Rating: −190°C to +260°C
Environmental:
Lead free, RoHS compliant.

RoHS COMPLIANT

UNLESS OTHERWISE SPECIFIED
ALL DIMENSIONS ARE INCHES [MM]
TOLERANCES: EXCEPT AS NOTED

INCHES		HOLES	
.X	± .10	Ø.X	±.10
.XX	± .020	Ø.XX	±.015
.XXX	± .015	Ø.XXX	±.010

APPROVALS		DATE
DRAWN	HR	8/24/18
CHECKED	RC	8/24/18
APPROVED		

ADAM TECH INTERCONNECTS
909 Rahway Avenue,
Union, NJ 07083
Phone: 908-687-5000
Fax: 908-687-5710

TITLE
SMA R/A PCB MOUNT JACK, FEMALE PIN

SIZE	PART NO.	REV.
X	RF2-100B-T-00-50-G-HDW	-

REF:	SCALE:	SHEET
S00291T	NTS	1 OF 1